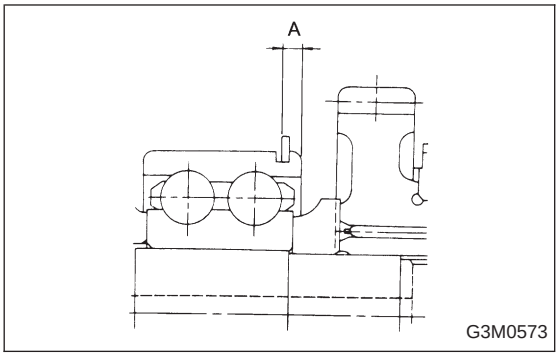

12) Selecting of main shaft rear plate
Using ST, measure the amount A of ball bearing protrusion from transmission main case surface and select the proper plate in the following table:

ST 498147000 DEPTH GAUGE

Dimension "A" mm (in)	Part No.	Mark
4.00 — 4.13 (0.1575 — 0.1626)	32294AA041	1
3.87 — 3.99 (0.1524 — 0.1571)	32294AA051	2

NOTE:
Before measuring, tap the end of main shaft with a plastic hammer lightly in order to make the clearance zero between the main case surface and the moving flange of bearing.

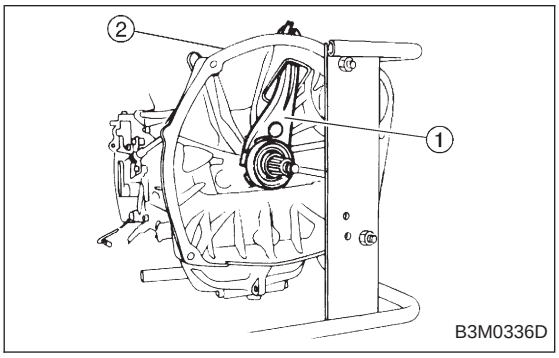

13) Install clutch release lever ① and operating cylinder (hydraulic application type) ②. <Ref. to 2-10 [W3C1], [W3C2], [W5A0].>

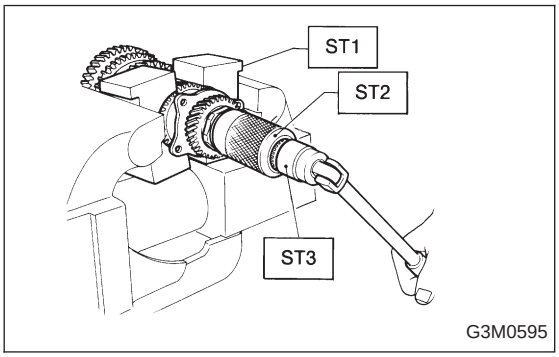

5. Drive Pinion Assembly (AWD Model)

A: DISASSEMBLY

1. DRIVE PINION SHAFT

1) Straighten lock nut at staked portion. Remove the lock nut using ST1, ST2 and ST3.

ST1 899884100 HOLDER
ST2 498427100 STOPPER
ST3 899988608 SOCKET WRENCH

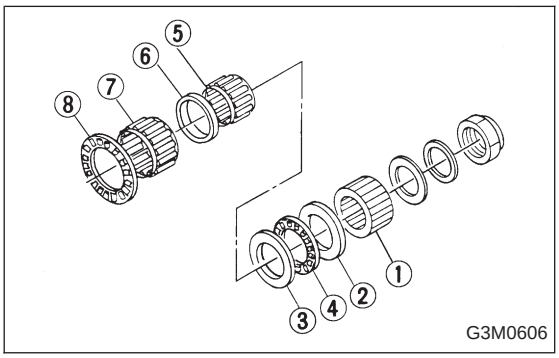

2) Withdraw drive pinion from driven shaft.
Remove differential bevel gear sleeve ①, adjusting washer No. 1 ② (25 x 37.5 x t), adjusting washer No. 2 ③ (25 x 37.5 x 4), thrust bearing ④ (25 x 37.5 x 3), needle bearing ⑤ (25 x 30 x 20), drive pinion collar ⑥, needle bearing ⑦ (30 x 37 x 23) and thrust bearing ⑧ (33 x 50 x 3).

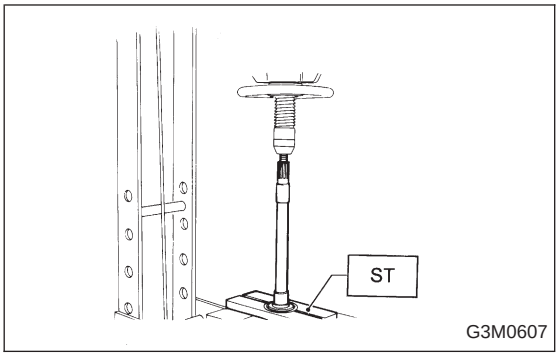

3) Remove roller bearing and washer (33 x 50 x 5) using ST and press.

ST 498077000 REMOVER

CAUTION:
Do not reuse roller bearing.

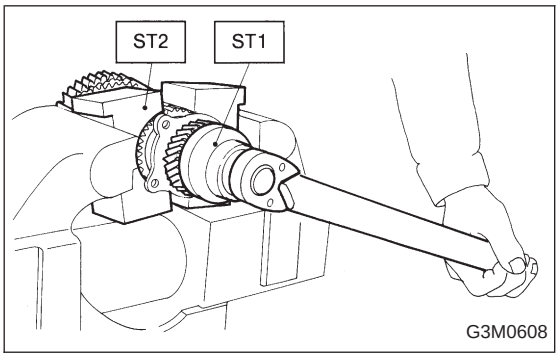

2. DRIVEN GEAR ASSEMBLY (2200 cc MODEL)

CAUTION:
Attach a cloth to the end of driven shaft (on the frictional side of thrust needle bearing) during disassembly or reassembly to prevent damage.

1) Straighten lock nut at staked portion. Remove the lock nut using ST1 and ST2.

ST1 499987300 SOCKET WRENCH (50)
ST2 899884100 HOLDER

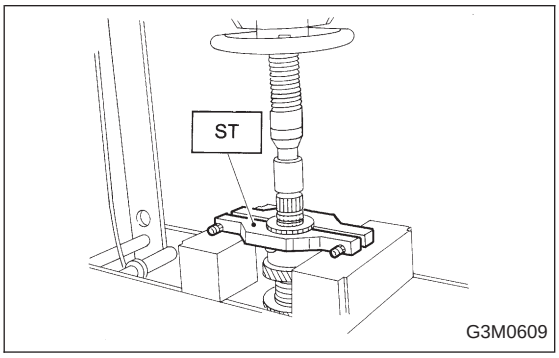

2) Remove 5th driven gear using ST.

ST 499857000 5TH DRIVEN GEAR REMOVER

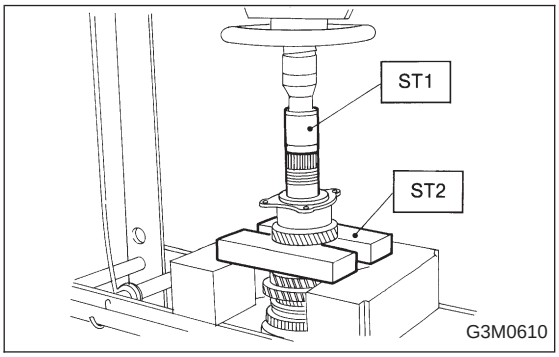

3) Remove woodruff key.
4) Remove roller bearing (42 x 74 x 40), 3rd and 4th driven gear using ST1 and ST2.

ST1 499757002 SNAP RING PRESS
ST2 899714110 REMOVER

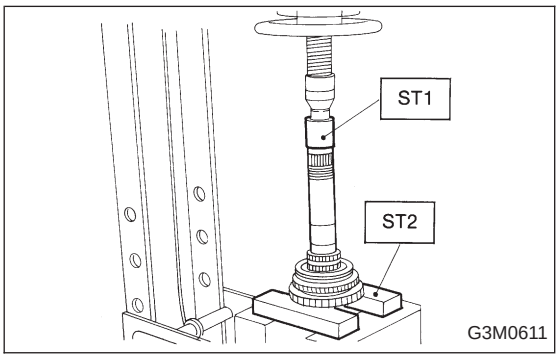

5) Remove the key.
6) Remove 2nd driven gear assembly.
7) Remove 1st driven gear, 2nd gear bushing, gear and hub using ST1 and ST2.
Replace gear and hub if necessary. Do not attempt to disassemble if at all possible because they must engage at a specified point. If they have to be disassembled, mark the engaging point beforehand.

ST1 499757002 SNAP RING PRESS
ST2 899714110 REMOVER

8) Remove sub gears for 1st and 2nd driven gear.

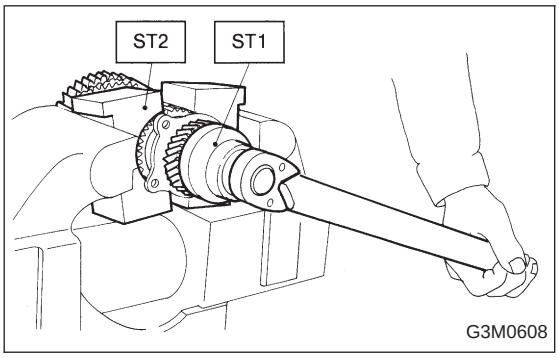

3. DRIVEN GEAR ASSEMBLY (2500 cc MODEL)

CAUTION:
Attach a cloth to the end of driven shaft (on the frictional side of thrust needle bearing) during disassembly or reassembly to prevent damage.

1) Straighten lock nut at staked portion. Remove the lock nut using ST1 and ST2.

ST1 499987300 SOCKET WRENCH (50)
ST2 899884100 HOLDER

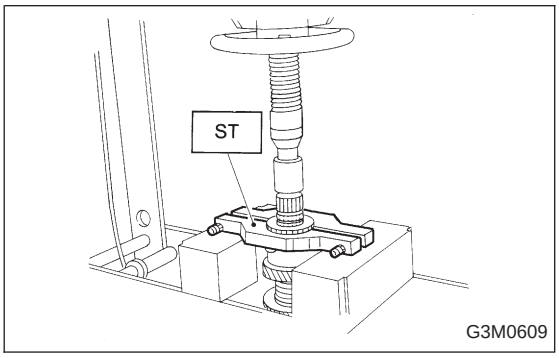

2) Remove 5th driven gear using ST.

ST 499857000 5TH DRIVEN GEAR REMOVER

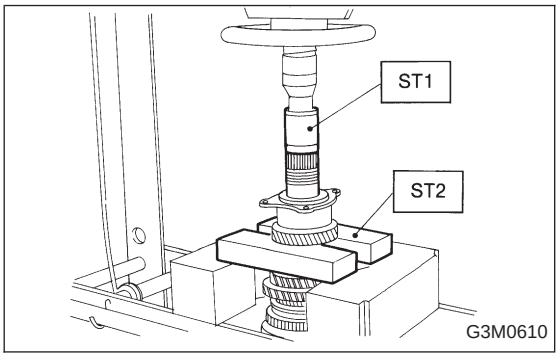

3) Remove woodruff key.
4) Remove roller bearing (42 x 74 x 40), 3rd-4th driven gear using ST1 and ST2.

ST1 499757002 SNAP RING PRESS
ST2 899714110 REMOVER

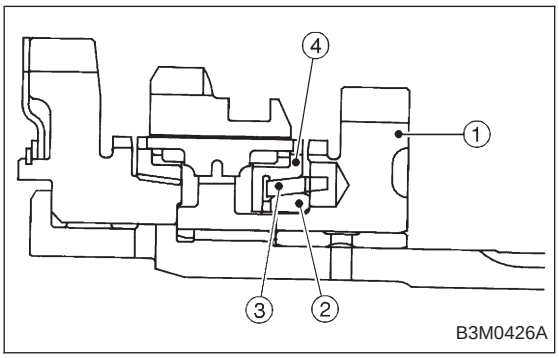

5) Remove the key.
6) Remove 2nd driven gear ①, inner baulk ring ②, synchro cone ③ and outer baulk ring ④.

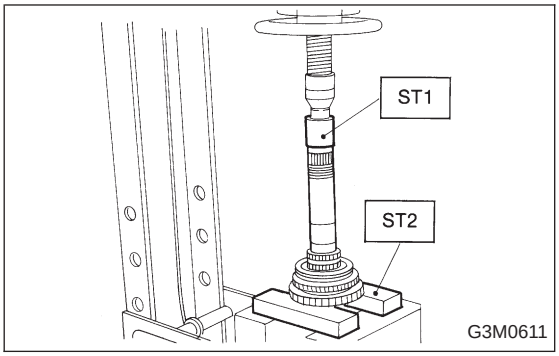

7) Remove 1st driven gear, 2nd gear bushing, gear and hub using ST1 and ST2.
NOTE:
Replace gear and hub if necessary. Do not attempt to disassemble if at all possible because they must engage at a specified point. If they have to be disassembled, mark the engaging point beforehand.

ST1 499757002 SNAP RING PRESS
ST2 899714110 REMOVER

8) Remove sub gear for 1st driven gear.

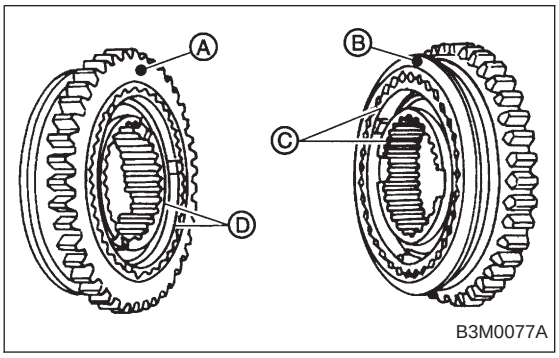

B: ASSEMBLY

1. GEAR AND HUB ASSEMBLY (2200 cc MODEL)

NOTE:
Position open ends of springs 120° apart.
Ⓐ: 1st gear side
Ⓑ: 2nd gear side
Ⓒ: Flush surface
Ⓓ: Stepped surface

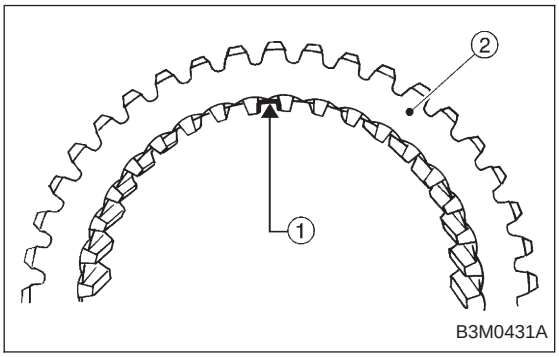

2. GEAR AND HUB ASSEMBLY (2500 cc MODEL)

Assemble gear and hub assembly.

NOTE:
- Use new gear and hub assembly, if gear or hub have been replaced.
- Be sure the insert keys are correctly located in the insert key grooves ① inside the reverse driven gear ②.

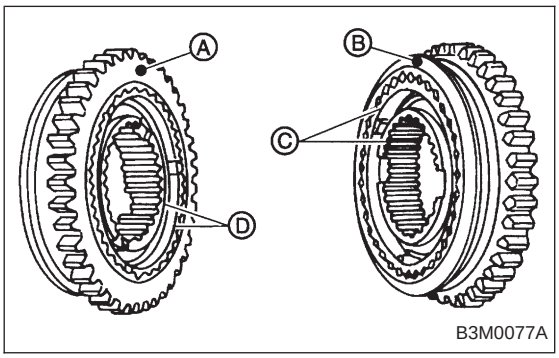

Ⓐ: 1st gear side
Ⓑ: 2nd gear side
Ⓒ: Flush surface
Ⓓ: Stepped surface

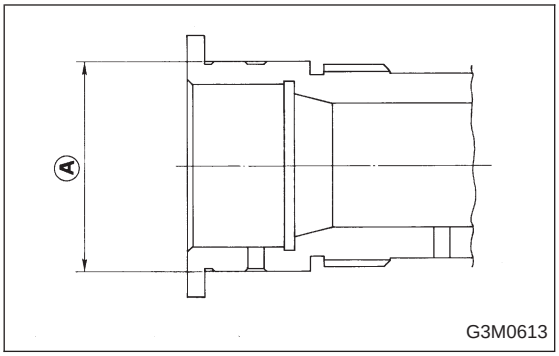

3. DRIVEN GEAR ASSEMBLY (2200 cc MODEL)

Assemble a driven shaft and 1st driven gear that select for adjustment the proper radial clearance.

Driven shaft		1st driven gear
Part No.	Diameter A mm (in)	Part No.
32229AA150	49.959 — 49.966 (1.9669 — 1.9672)	32231AA290
32229AA140	49.967 — 49.975 (1.9672 — 1.9675)	32231AA280

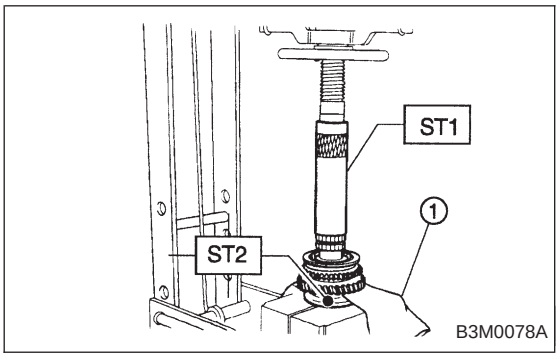

1) Install 1st driven gear, 1st-2nd baulk ring and gear and hub assembly onto driven shaft.

NOTE:
Take care to install gear hub in proper direction.

2) Install 2nd driven gear bushing onto driven shaft using ST1, ST2 and press.

ST1 499277200 INSTALLER
ST2 499587000 INSTALLER

CAUTION:
Attach a cloth ① to the end of driven shaft to prevent damage.

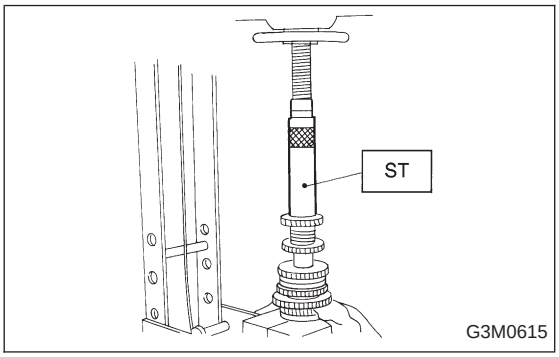

3) Install 2nd driven gear, 1st-2nd baulk ring and insert onto driven shaft. After installing key on driven shaft, install 3rd-4th driven gear using ST and press.

ST 499277200 INSTALLER

Align groove in baulk ring with insert.

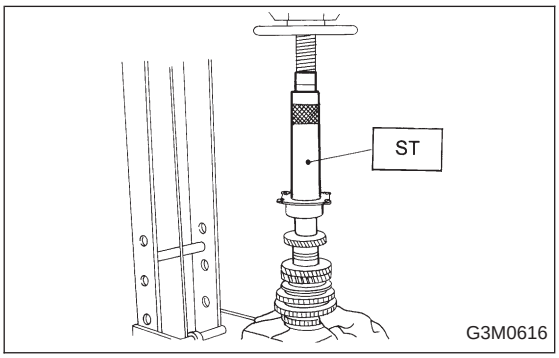

4) Install a set of roller bearings (42 x 74 x 40) onto the driven shaft using ST and press.

ST 499277200 INSTALLER

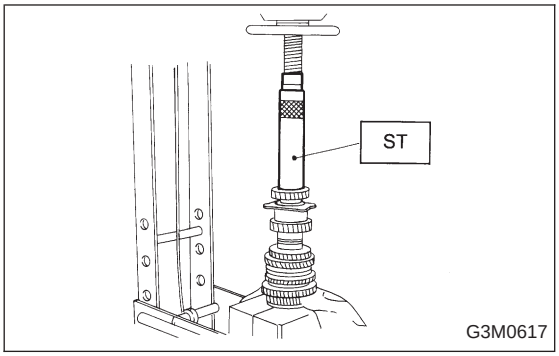

5) Position woodruff key in groove on the rear of driven shaft. Install 5th driven gear onto drive shaft using ST and press.

ST 499277200 INSTALLER

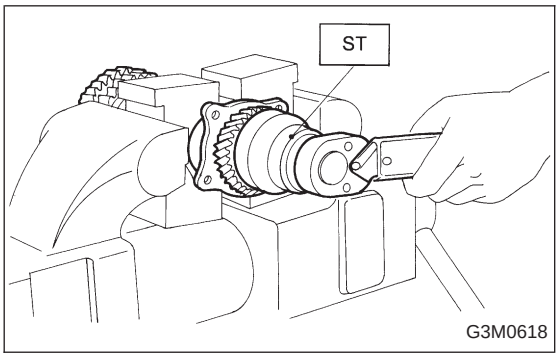

6) Install lock washer (42 x 53 x 2). Install lock nut (42 x 13) and tighten to the specified torque using ST.

ST 499987300 SOCKET WRENCH (50)

Tightening torque:
265±10 N·m (27±1 kg-m, 195±7 ft-lb)

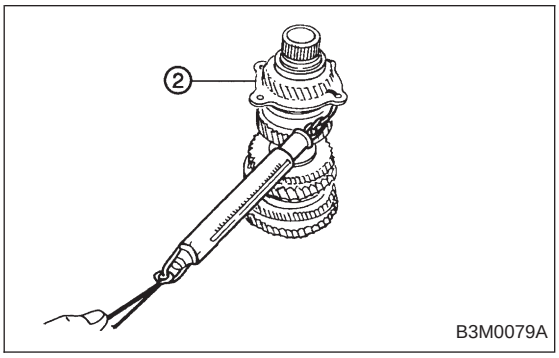

NOTE:
- Stake lock nut at two points.
- Using spring balancer, check that starting torque of roller bearing ② is 0.1 to 1.5 N·m (1 to 15 kg-cm, 0.9 to 13.0 in-lb).

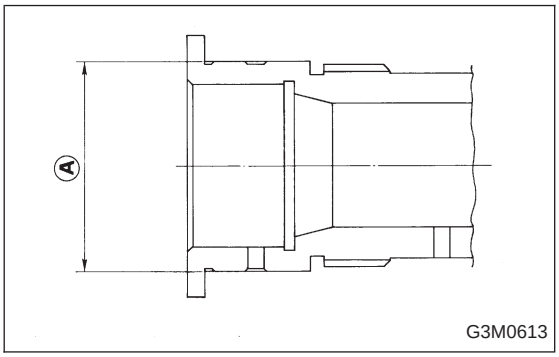

4. DRIVEN GEAR ASSEMBLY (2500 cc MODEL)

Assemble a driven shaft and 1st driven gear that select for adjustment the proper radial clearance.

Driven shaft		1st driven gear
Part No.	Diameter A mm (in)	Part No.
32229AA150	49.959 — 49.966 (1.9669 — 1.9672)	32231AA290
32229AA140	49.967 — 49.975 (1.9672 — 1.9675)	32231AA280

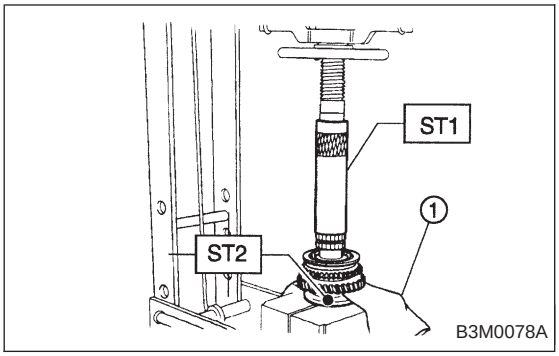

1) Install sub gear to 1st driven gear.
2) Install 1st driven gear, 1st baulk ring, gear and hub assembly onto driven shaft.

NOTE:
Take care to install gear hub in proper direction.

3) Install 2nd driven gear bushing onto driven shaft using ST1, ST2 and press.

ST1 499277200 INSTALLER
ST2 499587000 INSTALLER

CAUTION:
Attach a cloth ① to the end of driven shaft to prevent damage.

NOTE:
When press fitting, align oil holes of shaft and bush.

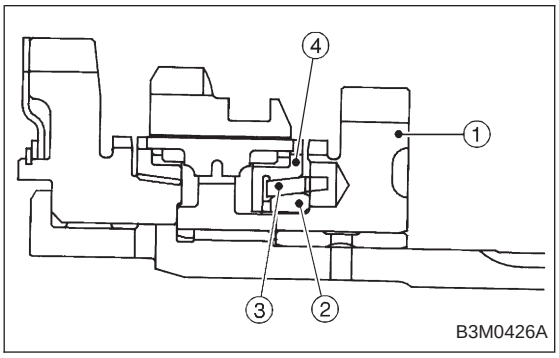

4) Install 2nd driven gear ①, inner baulk ring ②, synchro cone ③, outer baulk ring ④ and insert onto driven shaft.

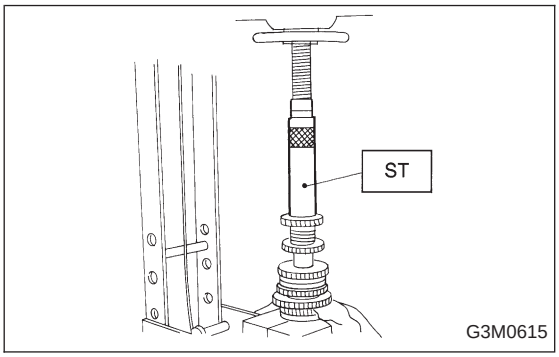

5) After installing key on driven shaft, install 3rd-4th driven gear using ST and press.

ST 499277200 INSTALLER

NOTE:
Align groove in baulk ring with insert.

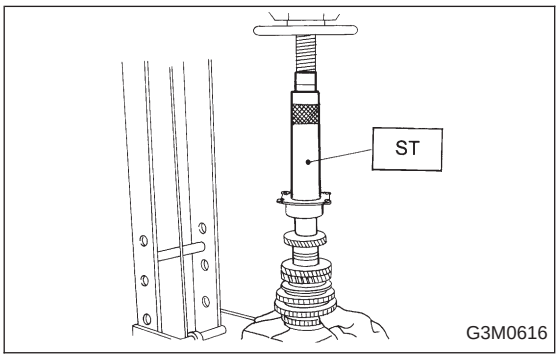

6) Install a set of roller bearings (42 x 74 x 40) onto the driven shaft using ST and press.

ST 499277200 INSTALLER

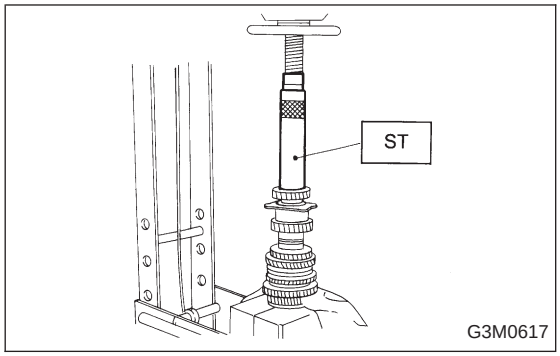

7) Position woodruff key in groove on the rear of driven shaft. Install 5th driven gear onto drive shaft using ST and press.

ST 499277200 INSTALLER

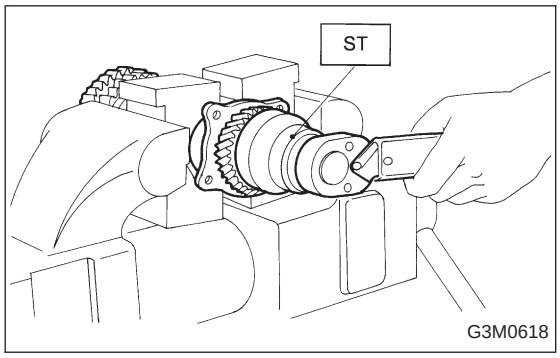

8) Install lock washer (42 x 53 x 2). Install lock nut (42 x 13) and tighten to the specified torque using ST.

ST 499987300 SOCKET WRENCH (50)

Tightening torque:
265±10 N·m (27±1 kg-m, 195±7 ft-lb)

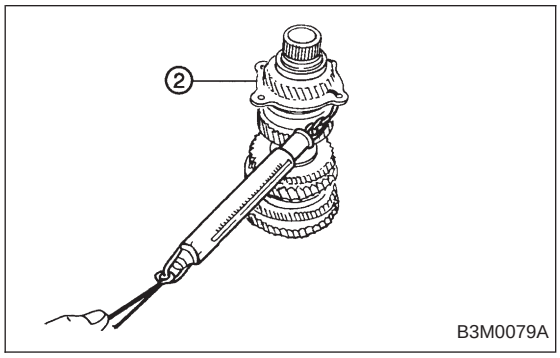

NOTE:
- Stake lock nut at two points.
- Using spring balancer, check that starting torque of roller bearing ② is 0.1 to 1.5 N·m (1 to 15 kg-cm, 0.9 to 13.0 in-lb).

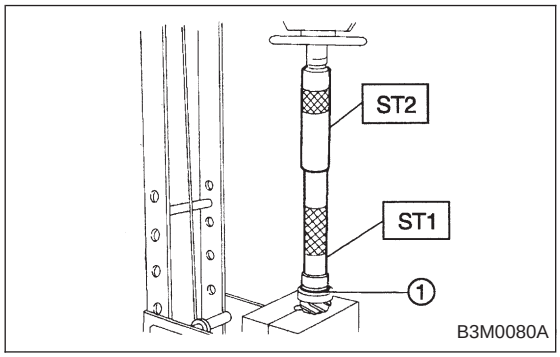

5. DRIVE PINION SHAFT

1) Install roller bearing onto drive pinion. Install washer ① (33 x 50 x 5) using ST1, ST2 and press.

ST1 499277100 BUSH 1-2 INSTALLER
ST2 499277200 INSTALLER

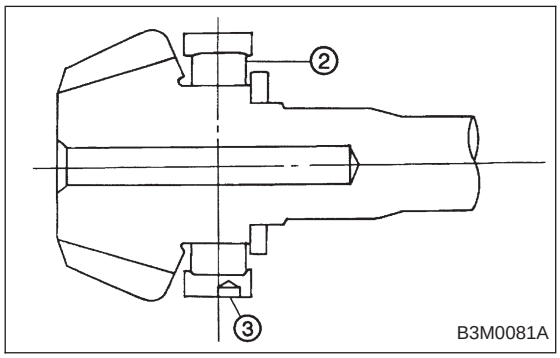

NOTE:
When installing roller bearing ②, note its directions (front and rear) because knock pin hole ③ in outer race is offset.

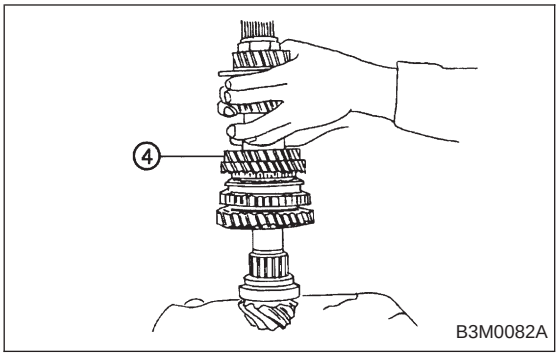

2) Install thrust bearing (33 x 50 x 3) and needle bearing (30 x 37 x 23). Install driven shaft assembly ④.

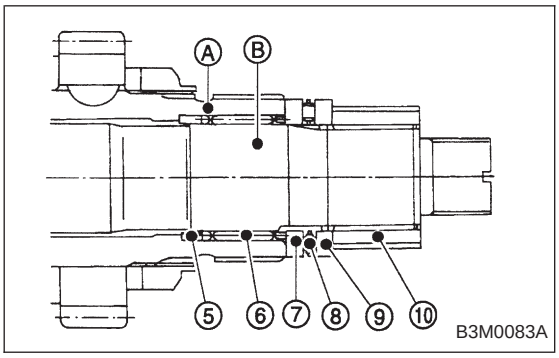

3) Install drive pinion collar ⑤, needle bearing ⑥ (25 x 30 x 20), adjusting washer No. 2 ⑦ (25 x 36 x 4), thrust bearing ⑧ (25 x 37.5 x 3), adjusting washer No. 1 ⑨ (25 x 36 x t) and differential bevel gear sleeve ⑩ in that order.

NOTE:
Be careful because spacer must be installed in proper direction.
Ⓐ: Driven shaft
Ⓑ: Driven pinion shaft

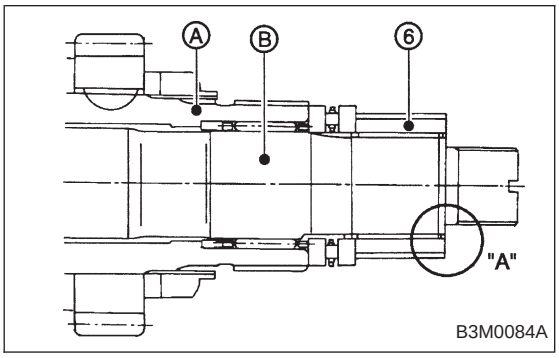

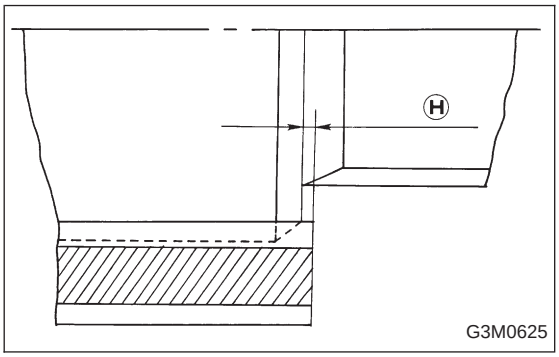

6. ADJUSTMENT OF THRUST BEARING PRELOAD

1) After completing the preceding steps 1) through 3), select adjusting washer No. 2 so that dimension Ⓗ is zero through visual check. Position washer (18.3 x 30 x 4) and lock washer (18 x 30 x 2) and install lock nut (18 x 13.5).

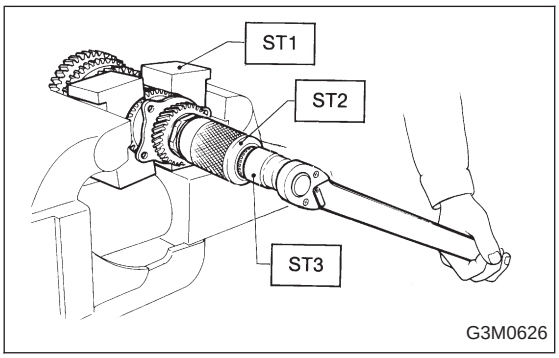

2) Using ST1, ST2 and ST3, tighten lock nut to the specified torque.

ST1	899884100	HOLDER
ST2	498427100	STOPPER
ST3	899988608	SOCKET WRENCH (27)

Tightening torque:
118±8 N·m (12±0.8 kg-m, 86.8±5.8 ft-lb)

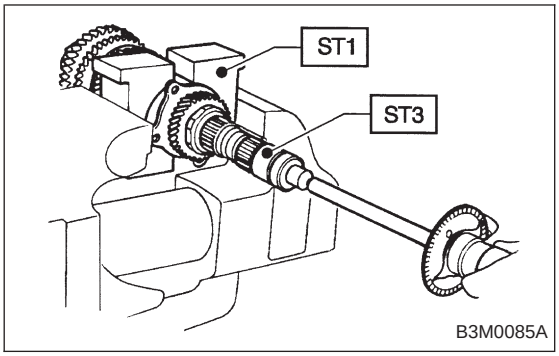

3) After removing ST2, measure starting torque using torque driver.

ST1 899884100 HOLDER
ST3 899988608 SOCKET WRENCH (27)

Starting torque:
54±25 N·m (5.5±2.5 kg-m, 40±18 ft-lb)

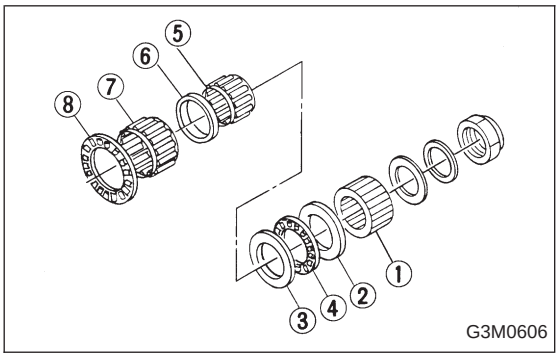

4) If starting torque is not within specified limit, select new adjusting washer No. 1 ② and recheck starting torque.

Adjusting washer No. 1	
Part No.	Thickness mm (in)
803025051	3.925 (0.1545)
803025052	3.950 (0.1555)
803025053	3.975 (0.1565)
803025054	4.000 (0.1575)
803025055	4.025 (0.1585)
803025056	4.050 (0.1594)
803025057	4.075 (0.1604)

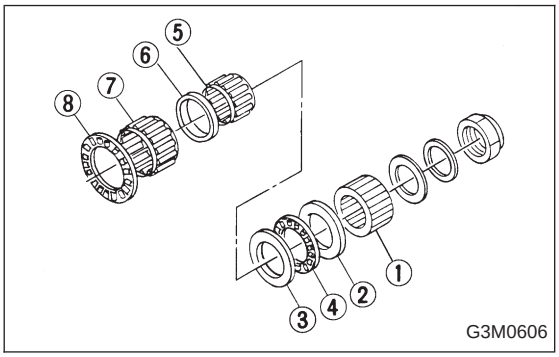

5) If specified starting torque range cannot be obtained when a No. 1 ② adjusting washer is used, then select a suitable No. 2 ③ adjusting washer from those listed in the following table. Repeat steps 1) through 4) to adjust starting torque.

Starting torque	Dimension H	Washer No. 2
Low	Small	Select thicker one.
High	Large	Select thinner one.

Adjusting washer No. 2	
Part No.	Thickness mm (in)
803025059	3.850 (0.1516)
803025054	4.000 (0.1575)
803025058	4.150 (0.1634)

6) Recheck that starting torque is within specified range, then clinch lock nut at four positions.

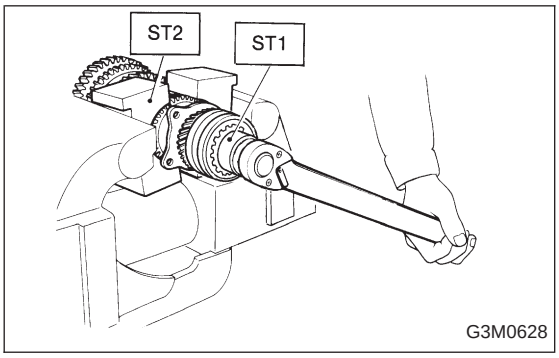

6. Drive Pinion Assembly (FWD Model)

A: DISASSEMBLY

1) Loosen lock nut using ST1 and ST2.

ST1 499987100 or 499987003 or 899984103 SOCKET WRENCH (35)
ST2 899884100 HOLDER

NOTE:
Remove caulking before taking off lock nut.

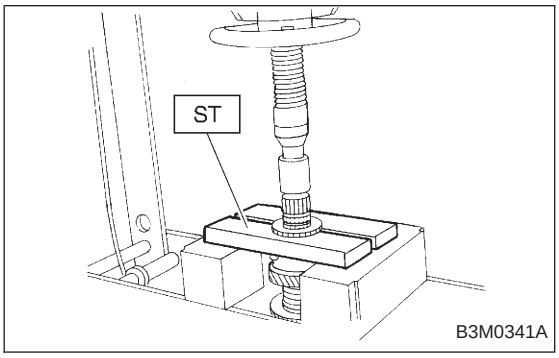

2) Remove 5th driven gear using a press.

ST 498077000 5TH DRIVEN GEAR REMOVER

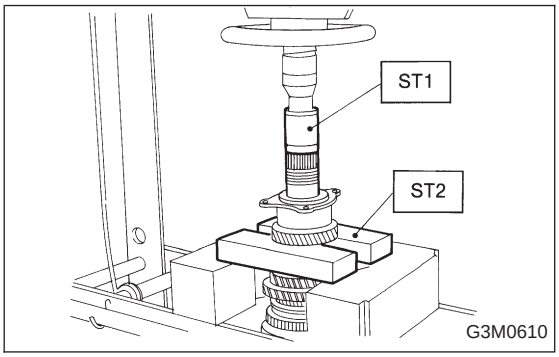

3) Remove woodruff key.

4) Remove roller bearing (29 x 74 x 38) and 3rd-4th driven gear using ST1 and ST2.

ST1 899714110 REMOVER
ST2 499757002 SNAP RING PRESS

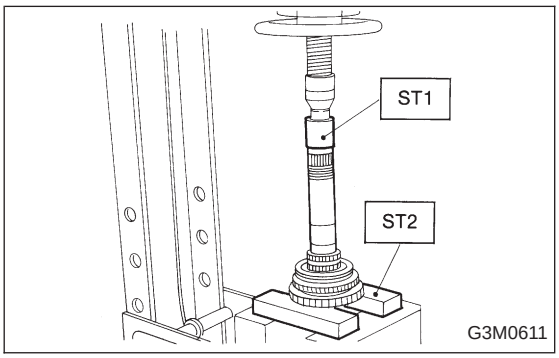

5) Remove 2nd driven gear assembly.
6) Remove 3rd-4th driven gear key.
7) Remove 1st driven gear, 2nd gear bushing, and gear & hub assembly using ST1 and ST2.
Replace gear and hub if necessary. Do not attempt to disassemble if at all possible because they must engage at a specified point. If they have to be disassembled, mark the engaging point beforehand.

ST1 499757002 SNAP RING PRESS
ST2 899714110 REMOVER