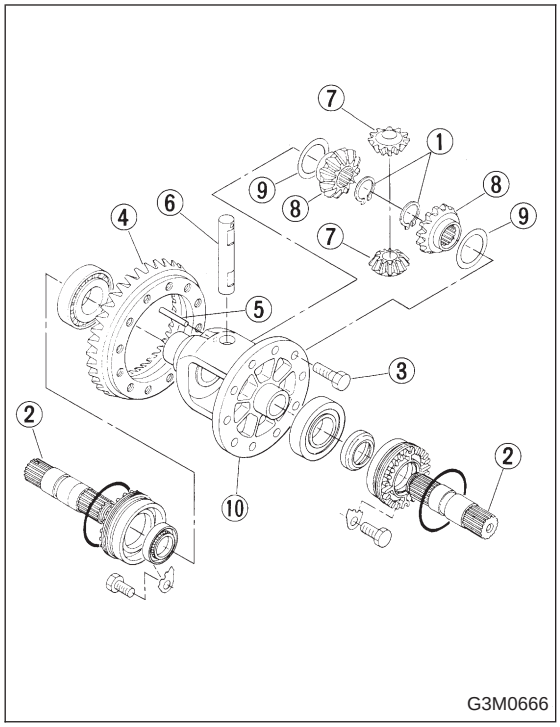


# 9. Front Differential

## A: DISASSEMBLY

1) Remove right and left snap rings ① from differential, and then remove two axle drive shafts ②.

NOTE:
During reassembly, reinstall each axle drive shaft in the same place from which it was removed.

2) Loosen twelve bolts ③ and remove hypoid drive gear ④.

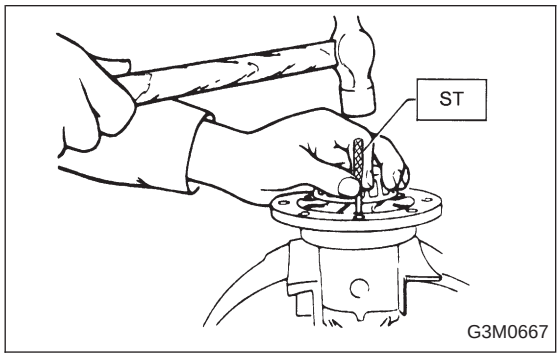


3) Drive out straight pin ⑤ from differential assembly toward hypoid driven gear.

ST 899904100 REMOVER

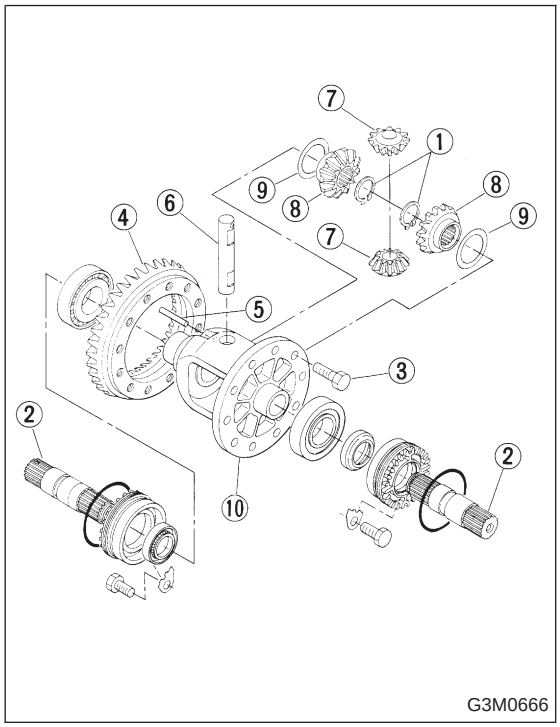


4) Pull out pinion shaft ⑥, and remove differential bevel pinion ⑦ and gear ⑧ and washer ⑨.

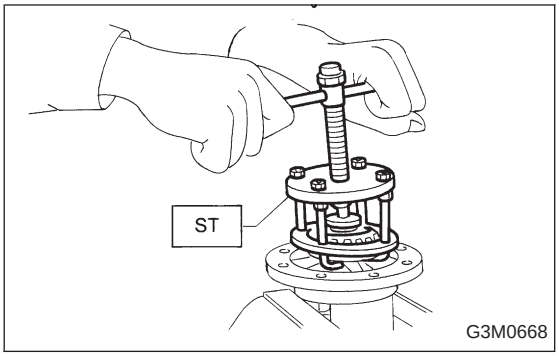


5) Remove roller bearing using ST.

ST 399527700 PULLER SET

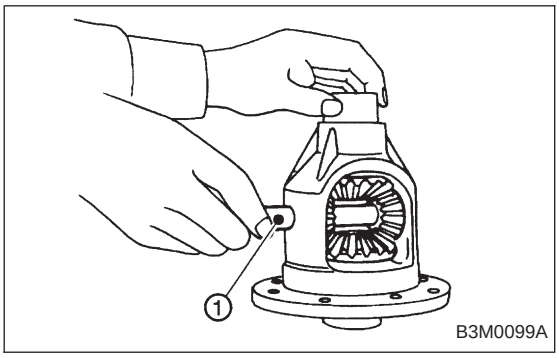


## B: ASSEMBLY

1) Install bevel gear and bevel pinion together with washers, and insert pinion shaft ①.

NOTE:
Face the chamfered side of washer toward gear.

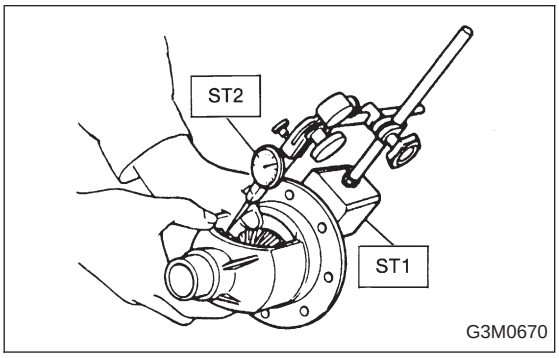


2) Measure backlash between bevel gear and pinion. If it is not within specifications, install a suitable washer to adjust it.

***Standard backlash:***
***0.13 — 0.18 mm (0.0051 — 0.0071 in)***

ST1 498247001 MAGNET BASE
ST2 498247100 DIAL GAUGE

NOTE:
Be sure the pinion gear tooth contacts adjacent gear teeth during measurement.

| Washer (38.1 x 50 x t) | |
|---|---|
| Part No. | Thickness mm (in) |
| 803038021 | 0.925 — 0.950 (0.0364 — 0.0374) |
| 803038022 | 0.975 — 1.000 (0.0384 — 0.0394) |
| 803038023 | 1.025 — 1.050 (0.0404 — 0.0413) |

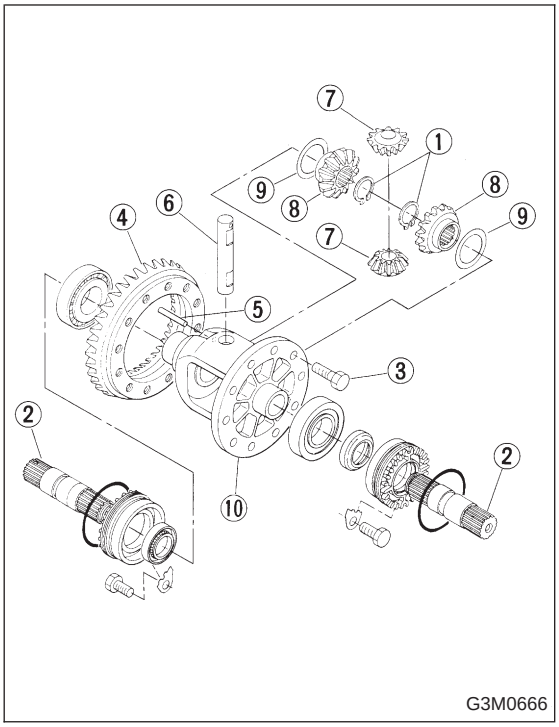


3) Align pinion shaft and differential case at their holes, and drive straight pin ⑤ into holes from the hypoid driven gear side, using ST.

ST 899904100 REMOVER

NOTE:
Lock straight pin after installing.

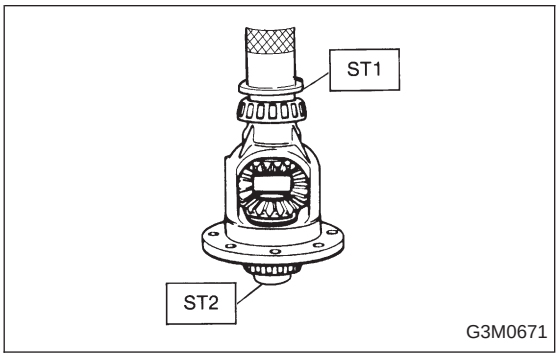


4) Install roller bearing (40 x 80 x 19.75) to differential case.

NOTE:
Be careful because roller bearing outer races are used as a set.

ST1 499277100 BUSH 1-2 INSTALLER
ST2 398497701 ADAPTER

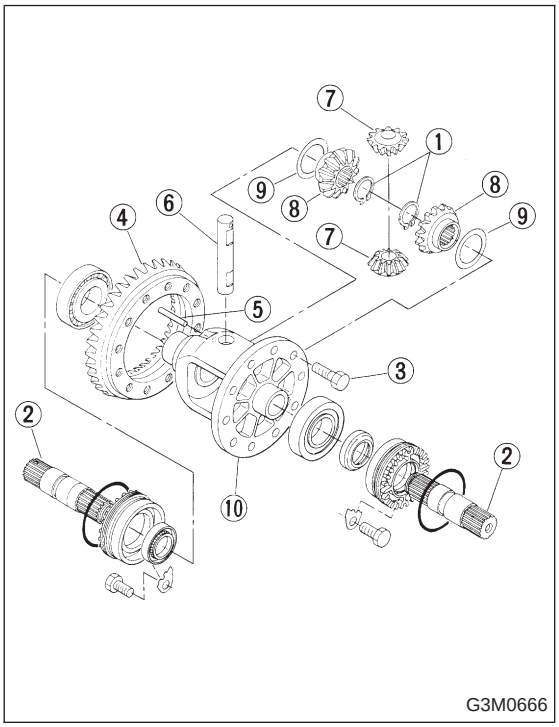


5) Install hypoid driven gear ④ to differential case ⑩ using twelve bolts ③.

***Tightening torque:***
***62±5 N·m (6.3±0.5 kg-m, 45.6±3.6 ft-lb)***

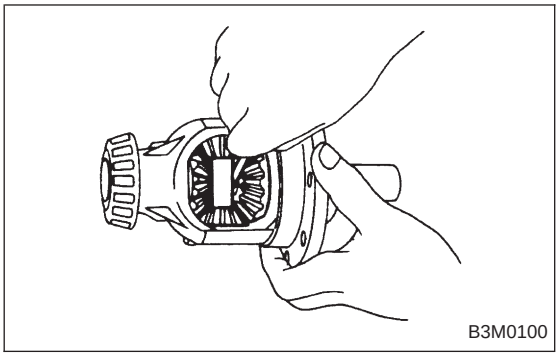


6) Position drive axle shaft in differential case and hold it with outer snap ring (28). Using a thickness gauge, measure clearance between the shaft and case is within specifications.

***Clearance:***
***0 — 0.2 mm (0 — 0.008 in)***

If it is not within specifications, replace snap ring with a suitable one.

| Snap ring (Outer-28) | |
|---|---|
| Part No. | Thickness mm (in) |
| 805028011 | 1.05 (0.0413) |
| 805028012 | 1.20 (0.0472) |