1. General

A: APPLICATION

Large title		Model	
		AWD	FWD
1	General	○	○
2	Transfer Case and Extension (AWD Model)	○	
3	Rear Case (FWD Model)		○
4	Transmission Case	○	○
5	Drive Pinion Assembly (AWD Model)	○	
6	Drive Pinion Assembly (FWD Model)		○
7	Main Shaft Assembly	○	○
8	Center Differential (AWD Model)	○	
9	Front Differential	○	○

The table above shows the titles of the main sections in Service Procedures and the applicable vehicle models. Carry out service operations by referring to the sections applicable to the vehicle to be serviced.

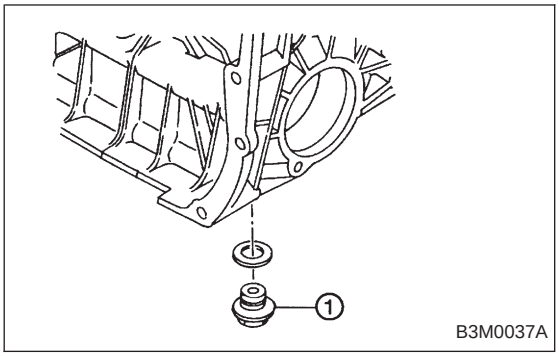

B: PRECAUTIONS

1) The following job should be followed before disassembly:

(1) Clean oil, grease, dirt and dust from transmission.
(2) Remove drain plug ① to drain oil. After draining, retighten it as before.

CAUTION:
Replace gasket with a new one.

Tightening torque:
44±3 N·m (4.5±0.3 kg-m, 32.5±2.2 ft-lb)

(3) Attach transmission to ST.

ST 499937100 TRANSMISSION STAND SET

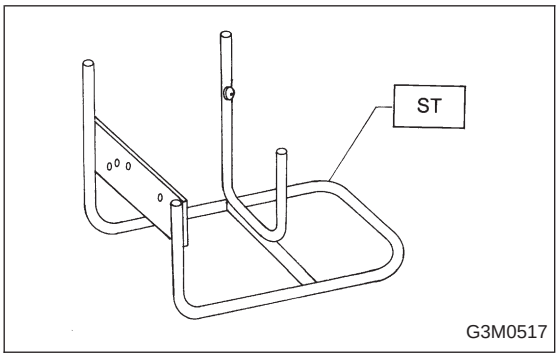

2) Rotating parts should be coated with oil prior to assembly.
3) All disassembled parts, if to be reused, should be reinstalled in the original positions and directions.
4) Gaskets and lock washers must be replaced with new ones.
5) Liquid gasket should be used where specified to prevent leakage.
6) Fill transmission gear oil through the oil level gauge hole up to upper point level gauge. <Ref. to 1-5 [09A1].>

C: INSPECTION

Disassembled parts should be washed clean first and then inspected carefully.

1) Bearings
Replace bearings in the following cases:
- Bearings whose balls, outer races and inner races are broken or rusty.
- Worn bearings
- Bearings that fail to turn smoothly or make abnormal noise when turned after gear oil lubrication.

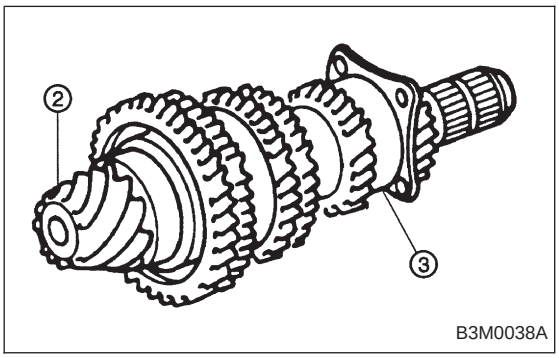

The ball bearing ③ on the rear side of the drive pinion shaft ② should be checked for smooth rotation before the drive pinion assembly is disassembled. In this case, because a preload is working on the bearing, its rotation feels like it is slightly dragging unlike the other bearings.
- Bearings having other defects

2) Bushing (each gear)
Replace the bushing in the following cases:

(1) When the sliding surface is damaged or abnormally worn.
(2) When the inner wall is abnormally worn.

3) Gears

(1) Replace gears with new ones if their tooth surfaces are broken, damaged, or excessively worn.
(2) Correct or replace if the cone that contacts the baulk ring is rough or damaged.
(3) Correct or replace if the inner surface or end face is damaged.

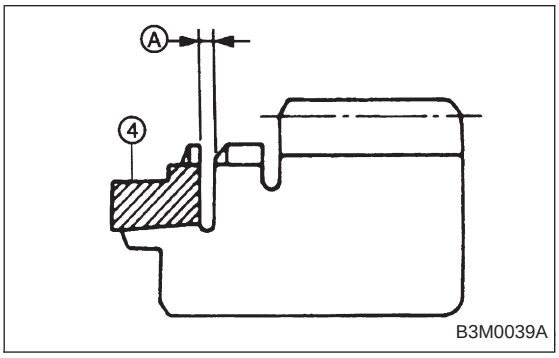

4) Baulk ring
Replace the ring in the following cases:
● When the inner surface and end face are damaged.
● When the ring inner surface is abnormally or partially worn down.
● If the gap between the end faces of the ring and the gear splined part is excessively small when the ring is pressed against the cone.

Clearance Ⓐ:
0.5 — 1.0 mm (0.020 — 0.040 in)

● When the contact surface of the synchronizer ring ④ insert is scored or abnormally worn down.

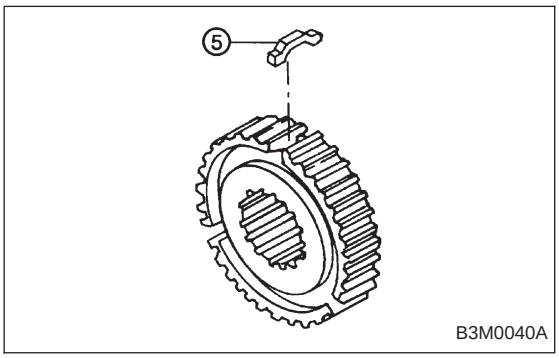

5) Insert ⑤ (shifting)
Replace the insert if deformed, excessively worn, or defective in any way.

6) Oil seal
Replace the oil seal if the lip is deformed, hardened, damaged, worn, or defective in any way.
7) O-ring
Replace the O-ring if the sealing face is deformed, hardened, damaged, worn, or defective in any way.
8) Gearshift mechanism
Repair or replace the gearshift mechanism if excessively worn, bent, or defective in any way.

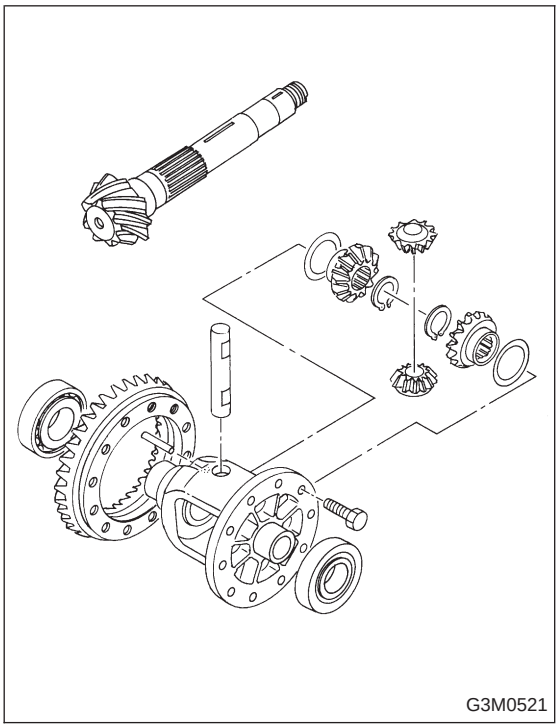

9) Differential gear
Repair or replace the differential gear in the following cases:

(1) The hypoid drive gear and drive pinion shaft tooth surface are damaged, excessively worn, or seized.
(2) The roller bearing on the drive pinion shaft has a worn or damaged roller path.
(3) There is damage, wear, or seizure of the differential bevel pinion, differential bevel gear, washer, pinion shaft, and straight pin.
(4) The differential case has worn or damaged sliding surfaces.