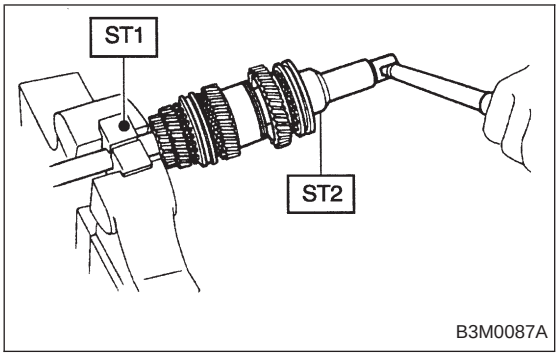

7. Main Shaft Assembly

A: DISASSEMBLY

1) Put vinyl tape around main shaft splines to protect oil seal from damage. Then pull out oil seal and needle bearing by hand.
2) Remove lock nut from transmission main shaft assembly.

NOTE:
Remove caulking before taking off lock nut.

ST1 498937000 TRANSMISSION HOLDER
ST2 499987003 SOCKET WRENCH (35)

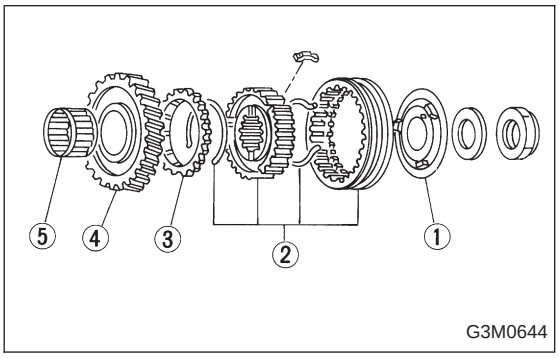

3) Remove insert stopper plate ①, sleeve and hub assembly No. 2, baulk ring ③, 5th drive gear ④, and needle bearing ⑤ (32 x 36 x 25.7).

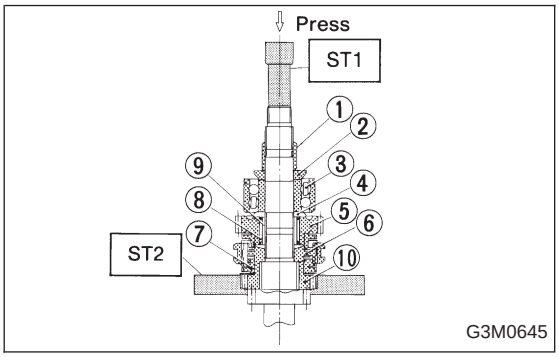

4) Using ST1, ST2 and a press, remove:
- 5th needle bearing inner race ①
- 5th gear thrust washer ②
- Ball bearing ③ (25.5 x 65 x 31)
- 4th gear thrust washer ④
- 4th drive gear ⑤
- Sleeve and hub assembly ⑥
- Baulk ring ⑦
- 4th needle bearing ⑧
- 4th needle bearing inner race ⑨
- 3rd drive gear ⑩

ST1 899864100 REMOVER
ST2 899714110 REMOVER

NOTE:
Replace sleeve and hub with new ones. Do not attempt to disassemble because they must engage at a specified point. If they should be disassembled, mark engagement point on splines beforehand.

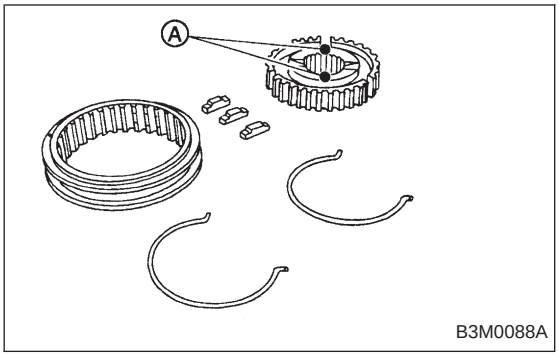

B: ASSEMBLY

1) Assemble sleeve and hub assembly for 3rd-4th and, 5th and high-low synchronizing.

NOTE:
Position open ends of spring 120° apart.
Ⓐ: Two holes for discrimination (3rd-4th hub)

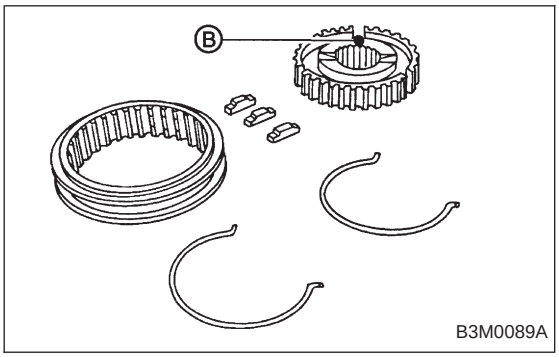

Ⓑ: One hole for discrimination (5th hub)

2) Install 3rd drive gear, baulk ring, and sleeve and hub assembly for 3rd-4th needle bearing (32 x 36 x 25.7) on transmission main shaft.

NOTE:
Align groove in baulk ring with shifting insert.

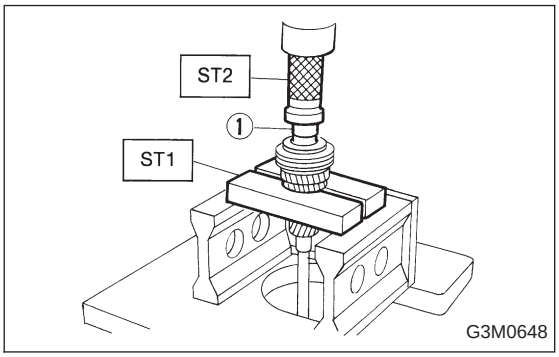

3) Install 4th needle bearing race ① onto transmission main shaft using ST1, ST2 and a press.

ST1 899714110 REMOVER
ST2 499877000 RACE 4-5 INSTALLER

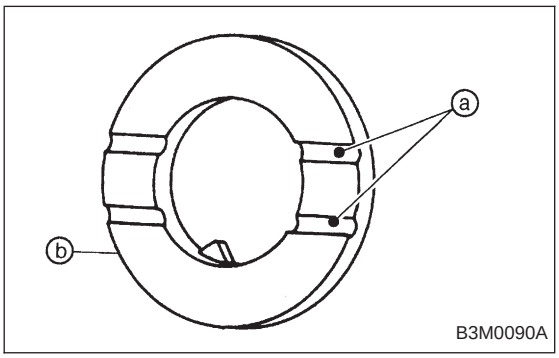

4) Install baulk ring, needle bearing (32 x 30 x 25.7), 4th drive gear and 4th gear thrust washer to transmission main shaft.

NOTE:
Face thrust washer in the correct direction.
ⓐ: Groove
ⓑ: 4th gear side

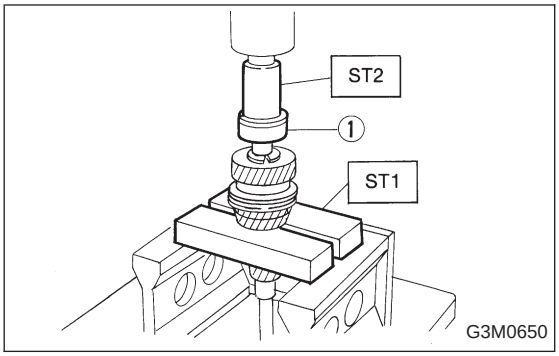

5) Drive ball bearing ① onto the rear section of transmission main shaft using ST1, ST2 and a press.

ST1 899714110 REMOVER
ST2 499877000 RACE 4-5 INSTALLER

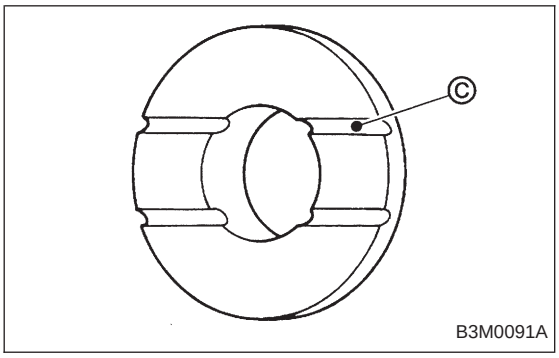

6) Using the same tools as in step 5) above, install the following parts onto the rear section of transmission main shaft.

- 5th gear thrust washer

NOTE:
Face thrust washer in the correct direction.
ⓒ: Face this surface to 5th gear side.

ST1 899714110 REMOVER
ST2 499877000 RACE 4-5 INSTALLER

- 5th needle bearing race

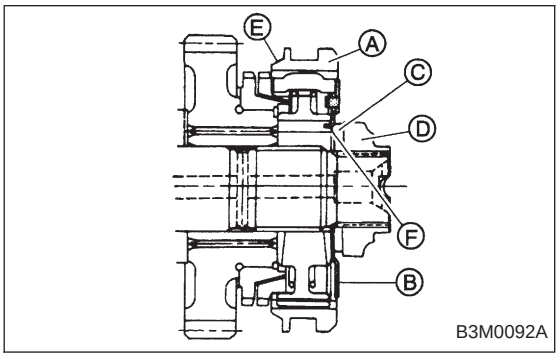

7) Install the following parts to the rear section of transmission main shaft.

- Needle bearing (32 x 36 x 25.7)
- 5th drive gear
- Baulk ring
- Sleeve Ⓐ and hub assembly
- Insert stopper plate Ⓑ
- Lock washer Ⓒ (22 x 38 x 2)
- Tighten lock nuts Ⓓ (22 x 13) to the specified torque using ST1 and ST2.

ST1 499987003 SOCKET WRENCH (35)
ST2 498937000 TRANSMISSION HOLDER

NOTE:

- Align groove Ⓔ in baulk ring with shifting insert.
- Be sure to fit pawl Ⓕ of insert stopper plate into 4 mm (0.16 in) dia. hole in the boss section of synchronizer hub.
- Secure lock nuts in two places after tightening.

Tightening torque:
118±6 N·m (12.0±0.6 kg-m, 86.8±4.3 ft-lb)