2. Transfer Case and Extension (AWD Model)

A: REMOVAL

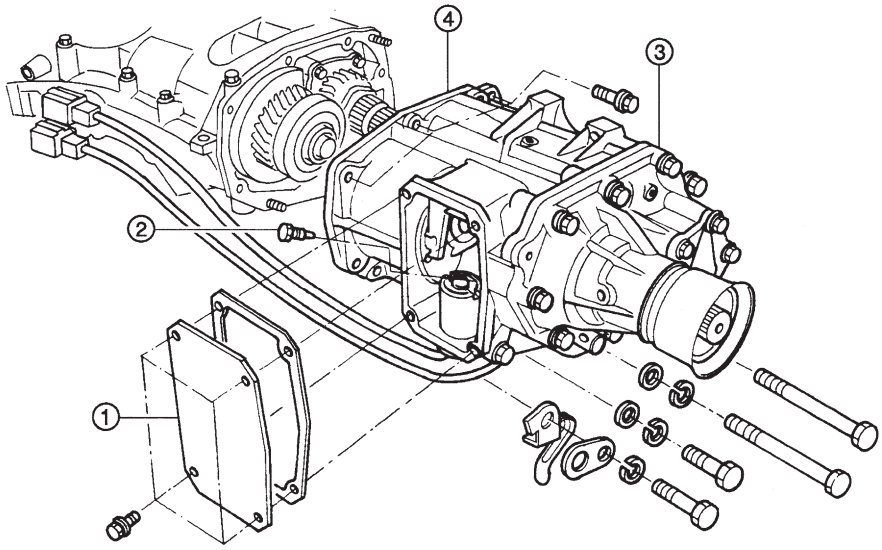

1) Remove transfer cover ①.
2) Remove shifter fork screw ② which secures selector arm to shifter arm.
3) Remove transfer case ④ with extension assembly ③.

B: DISASSEMBLY

1. SEPARATION OF TRANSFER CASE AND EXTENSION ASSEMBLY

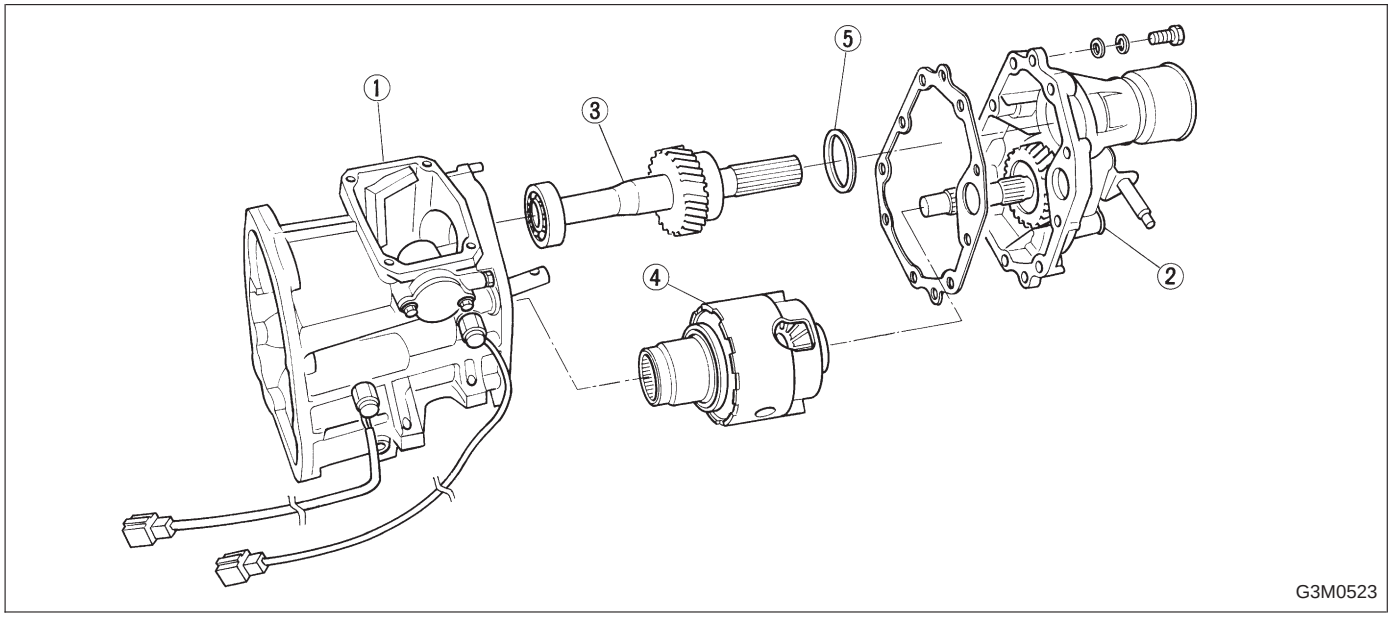

1) Separate transfer case ① and extension assembly ②.
2) Remove transfer driven gear ③ and center differential ④ as a set.
3) Remove thrust washer ⑤ (52 x 61 x t).

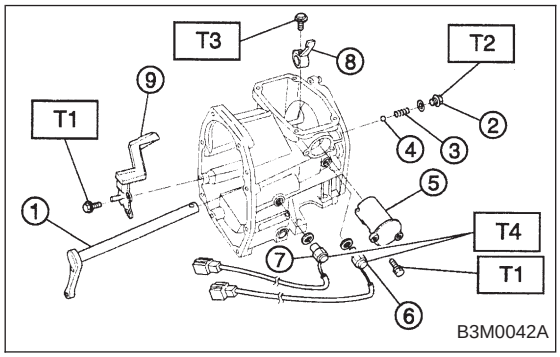

2. TRANSFER CASE

1) Remove neutral switch ⑥.

NOTE:
Before removing shifter arm, disconnect neutral switch.

2) Draw out shifter arm ① and remove selector arm ⑧.
3) Remove plug ②, spring ③ and reverse check ball ④.

Tightening torque:

T1: 6.4±0.5 N·m (0.65±0.05 kg-m, 4.7±0.4 ft-lb)
T2: 10±1 N·m (1.0±0.1 kg-m, 7.2±0.7 ft-lb)
T3: 19.6±1.5 N·m (2.00±0.15 kg-m, 14.5±1.1 ft-lb)
T4: 25±2 N·m (2.5±0.2 kg-m, 18.1±1.4 ft-lb)

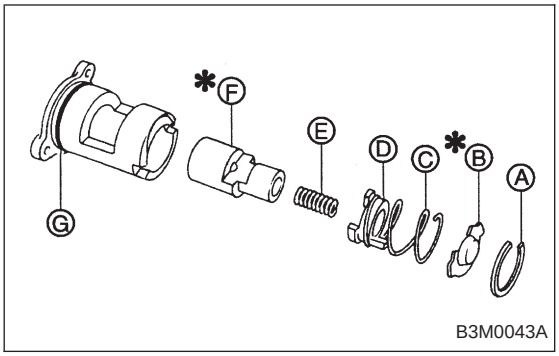

4) Remove reverse check sleeve ⑤.
Disassembly procedure is as follows:

(1) Using a standard screwdriver, remove snap ring Ⓐ (Inner-28).

NOTE:
Replace snap ring with a new one if deformed or weakened.

(2) Remove reverse check plate Ⓑ.
(3) Remove reverse check spring Ⓒ with cam Ⓓ.
(4) Remove reverse return spring Ⓔ.
(5) Remove reverse accent shaft Ⓕ.
(6) Remove O-ring Ⓖ.

NOTE:
● Reverse check sleeve assembly uses an O-ring which should not be scratched.
● Be careful not to break adjustment shim placed between reverse check sleeve assembly and case.

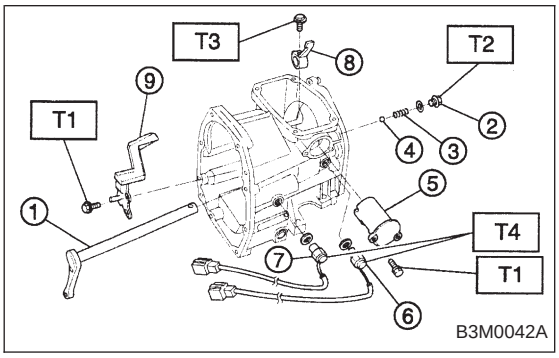

5) Remove back-up light switch ⑦.
6) Remove oil guide ⑨.

Tightening torque:
T1: 6.4±0.5 N·m (0.65±0.05 kg-m, 4.7±0.4 ft-lb)
T2: 10±1 N·m (1.0±0.1 kg-m, 7.2±0.7 ft-lb)
T3: 19.6±1.5 N·m (2.00±0.15 kg-m, 14.5±1.1 ft-lb)
T4: 25±2 N·m (2.5±0.2 kg-m, 18.1±1.4 ft-lb)

3. EXTENSION

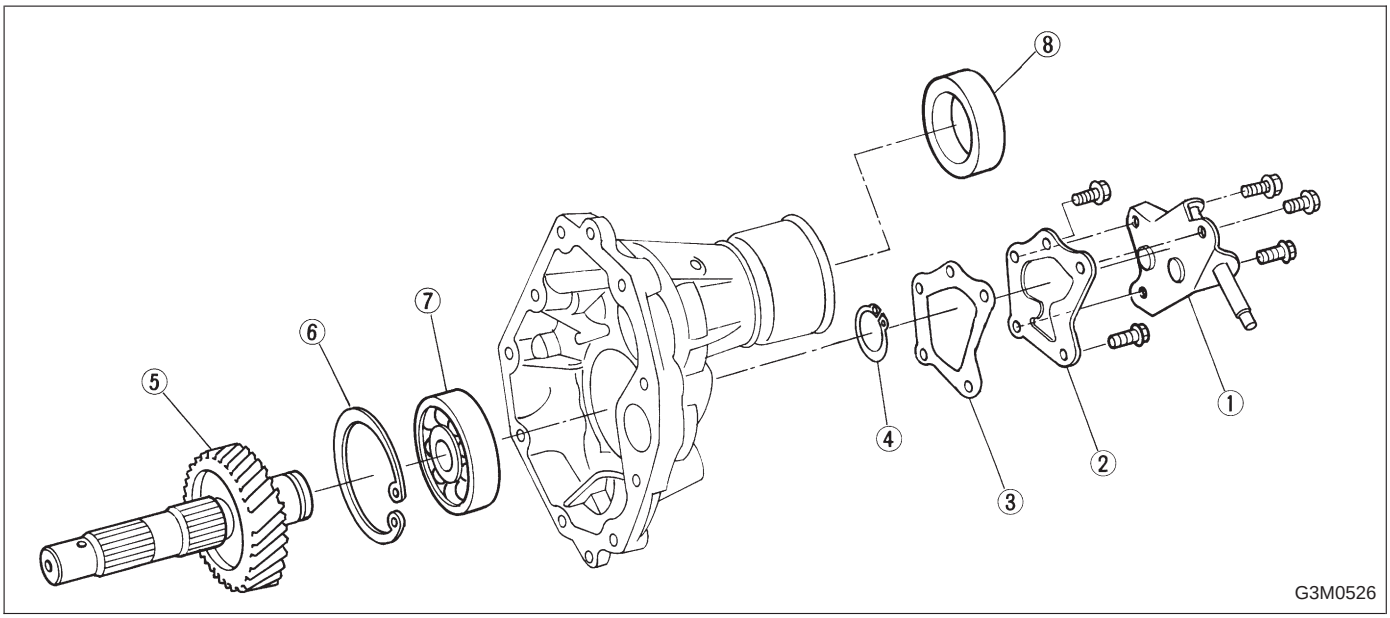

1) Remove extension cover ② and shift bracket ①.
2) Remove snap ring ④ (Outer-30).
3) Remove transfer drive gear ⑤.

CAUTION:
Do not remove ball bearing unless replacing.

4) Remove snap ring ⑥ (Inner-72).
5) Remove ball bearing ⑦.

CAUTION:
Do not reuse ball bearing.

6) Remove oil seal ⑧.

CAUTION:
Do not reuse oil seal.

C: ASSEMBLY

1. EXTENSION

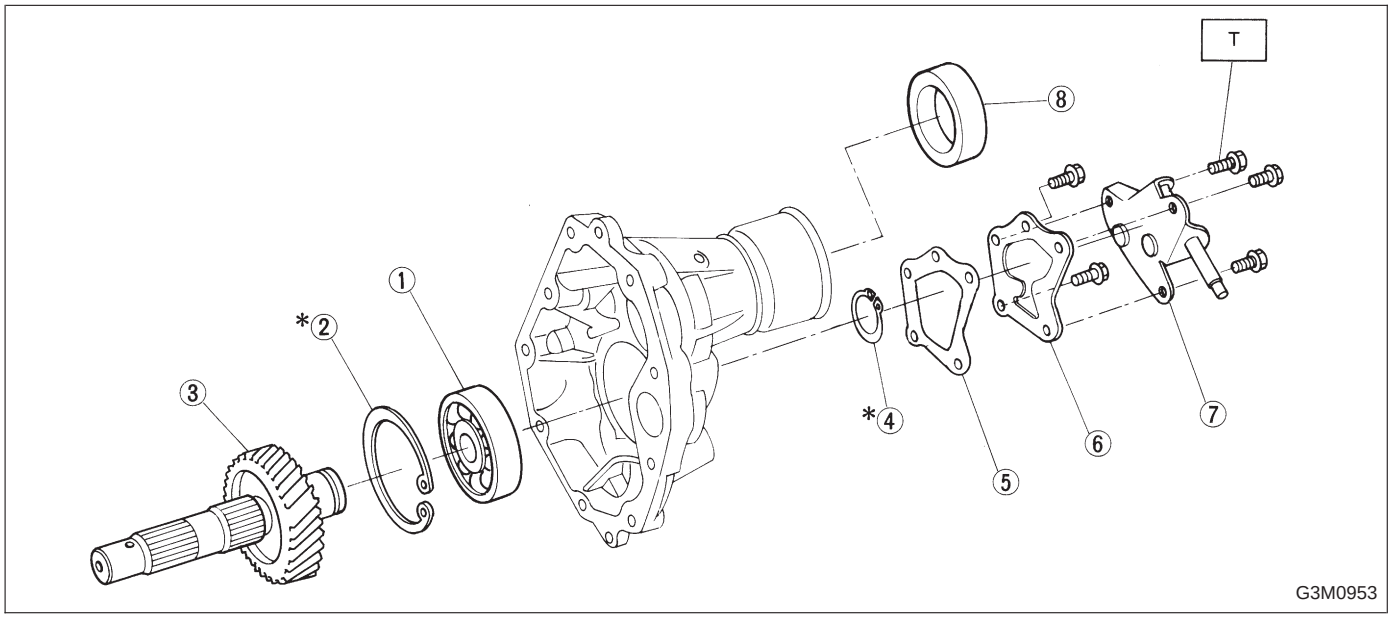

Tightening torque: N·m (kg-m, ft-lb)
T: 25±2 (2.5±0.2, 18.1±1.4)

1) Installation of ball bearing ① and selection of snap ring ② (Inner-72)

(1) Attach ball bearing ① (30 x 72 x 17) to extension and install snap ring ②.

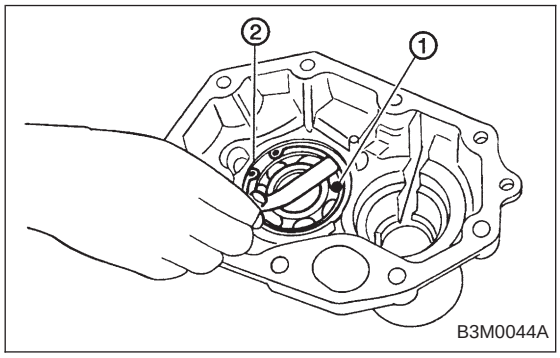

(2) Measure clearance between snap ring ② and outer race of ball bearing ① with a thickness gauge.

CAUTION:
Replace ball bearing with a new one.

Clearance:
0 — 0.15 mm (0 — 0.0059 in)

(3) If the measurement is not within the specification, select suitable snap ring ②.

Snap ring (Inner-72)	
Part No.	Thickness mm (in)
805172071	1.78 (0.0701)
805172072	1.90 (0.0748)
805172073	2.02 (0.0795)

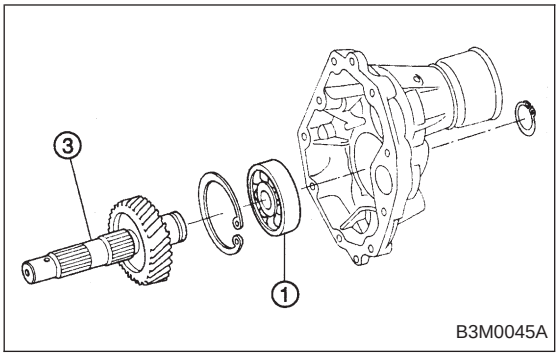

2) Installation of transfer drive gear ③
Press transfer drive gear into inner race of ball bearing.

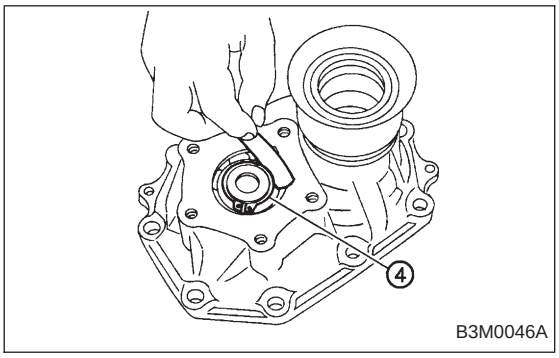

3) Selection of snap ring ④ (Outer-30)
   (1) Install snap ring ④ on transfer drive shaft.
   (2) Measure clearance between snap ring and inner race of ball bearing with a thickness gauge.

Clearance:
0 — 0.15 mm (0 — 0.0059 in)

   (3) If the measurement is not within the specification, select suitable snap ring.

Snap Ring (Outer-30)	
Part No.	Thickness mm (in)
805030041	1.53 (0.0602)
805030042	1.65 (0.0650)
805030043	1.77 (0.0697)

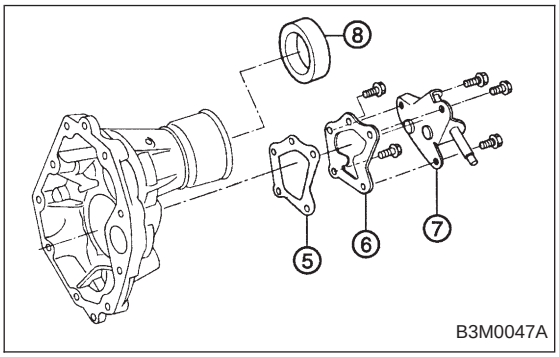

4) Install extension cover ⑥, gasket ⑤ and shift bracket ⑦.

CAUTION:
Use new gasket.

5) Install oil seal ⑧ with ST.

ST 498057300 INSTALLER

CAUTION:
Use new oil seal.

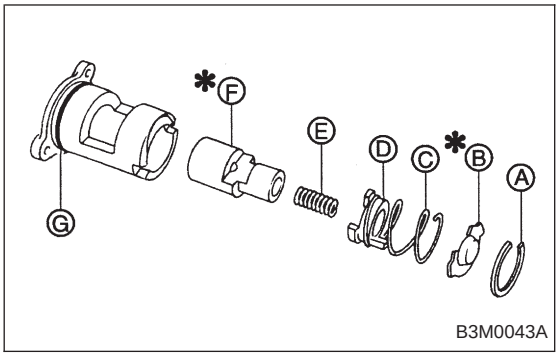

2. TRANSFER CASE

Assembly of transfer case is in the reverse order of disassembly. Do the following:

1) Assembly of reverse check sleeve

(1) Install reverse accent shaft Ⓕ, check cam Ⓓ, return spring Ⓔ and check spring Ⓒ onto reverse check sleeve.

NOTE:
Be sure the bent section of reverse check spring is positioned in the groove in check cam.

(2) Hook the bent section of reverse check spring over reverse check plate Ⓑ.
(3) Rotate cam so that the protrusion of reverse check cam is at the opening in plate.
(4) With cam held in that position, install plate onto reverse check sleeve and hold with snap ring Ⓐ (Inner-28).
(5) Position O-ring Ⓖ (35.4 x 1.5) in groove in sleeve.

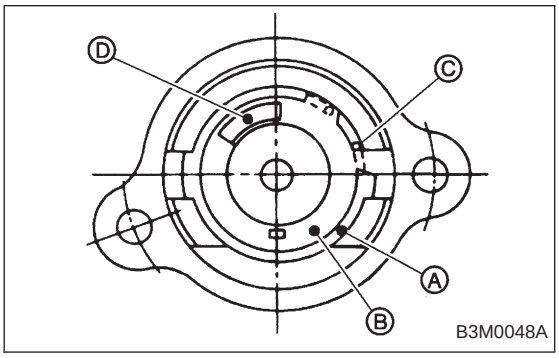

CAUTION:
- **Make sure the cutout section of reverse accent shaft is aligned with the opening in reverse check sleeve.**
- **Spin cam by hand for smooth rotation.**

If it does not return properly, replace reverse check spring.
- **Move cam and shaft all the way toward plate and release.**

If cam does not return properly, replace reverse check spring; if shaft does not, check for scratches on the inner surface of sleeve. If sleeve is in good order, replace spring.
- **Select a suitable reverse accent shaft and reverse check plate by referring to “Neutral Position Adjustment.”**

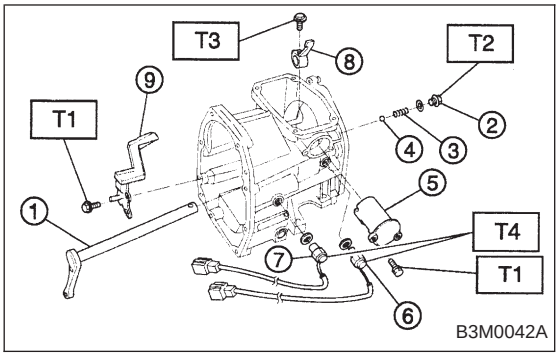

2) Installation of shifter arm ① and selector arm ⑧
Install shifter arm into the partition from the front while inserting selector arm into the opening in reverse check sleeve. Pass shaft through hole in selector arm until its end comes out of the rear of transfer case.

NOTE:
Apply a coat of gear oil to shifter arm. Also make sure oil seal is positioned properly.

Tightening torque:
T1: 6.4±0.5 N·m (0.65±0.05 kg-m, 4.7±0.4 ft-lb)
T2: 10±1 N·m (1.0±0.1 kg-m, 7.2±0.7 ft-lb)
T3: 19.6±1.5 N·m (2.00±0.15 kg-m, 14.5±1.1 ft-lb)
T4: 25±2 N·m (2.5±0.2 kg-m, 18.1±1.4 ft-lb)

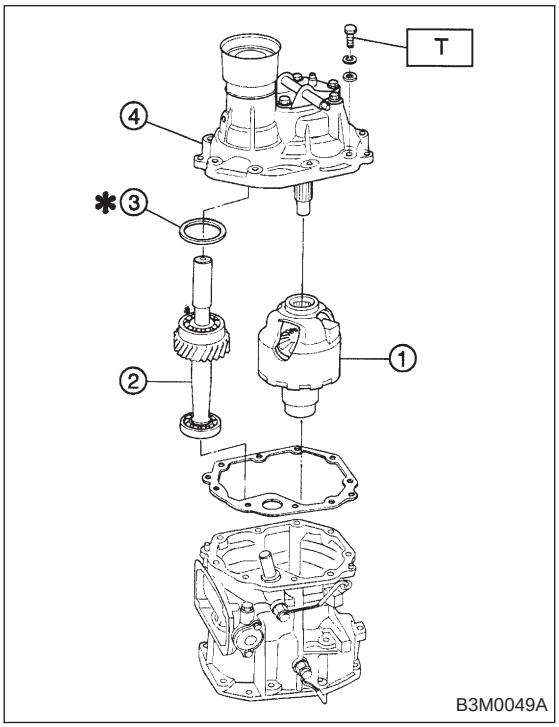

3. COMBINATION OF TRANSFER CASE AND EXTENSION ASSEMBLY

1) Install center differential ① and transfer driven gear ② into transfer case.

Tightening torque:
T: 37±3 N·m (3.8±0.3 kg-m, 27.5±2.2 ft-lb)

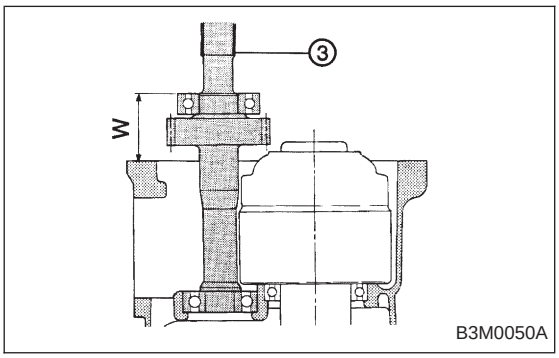

2) Selection of thrust washer (52 x 61 x t)
(1) Measure height “W” between transfer case and ball bearing on the transfer driven gear ③.

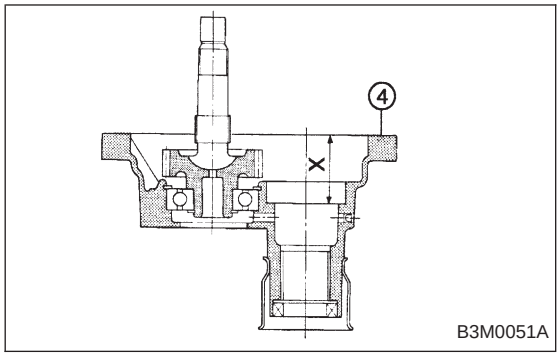

(2) Measure depth “X” as shown in figure.

④ Extension

(3) Calculate space “Y” using the following equation: Y = X − W + 0.24 mm (0.0094 in) [Thickness of gasket]

(4) Select suitable washer in the following table:

Space “Y” mm (in)	Thrust washer (52 x 61 x t)	
	Part No.	Thickness mm (in)
0.55 — 0.79 (0.0217 — 0.0311)	803052021	0.50 (0.0197)
0.80 — 1.04 (0.0315 — 0.0409)	803052022	0.75 (0.0295)
1.05 — 1.30 (0.0413 — 0.0512)	803052023	1.00 (0.0394)

Standard clearance between thrust washer and ball bearing:

0.05 — 0.30 mm (0.0020 — 0.0118 in)

(5) Fit thrust washers on transfer drive shaft.

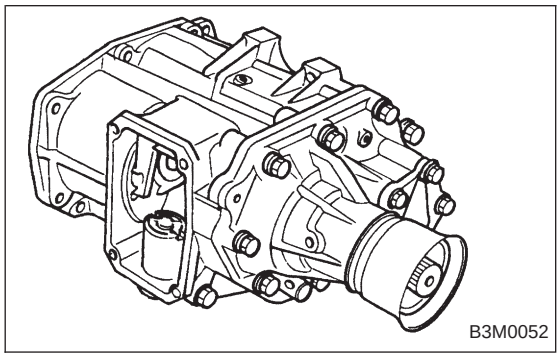

3) Install extension assembly into transfer case.

D: INSTALLATION

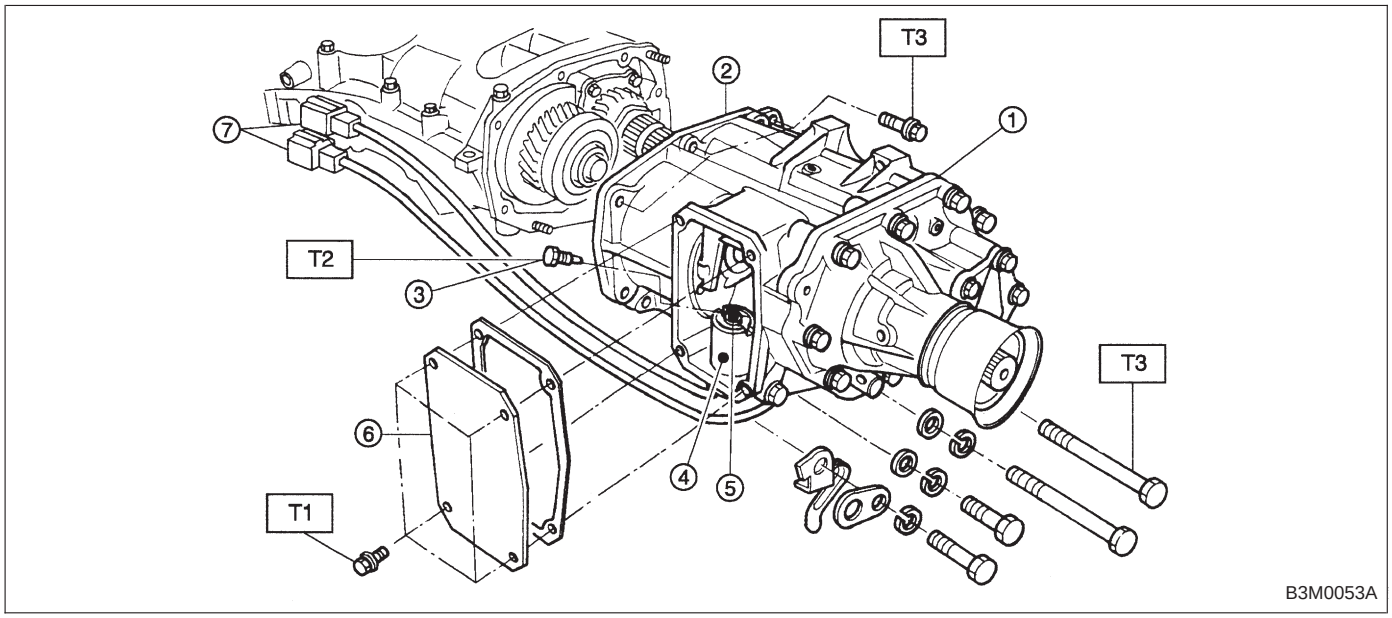

Tightening torque: N·m (kg-m, ft-lb)
T1: 15.7±1.5 (1.6±0.15, 11.6±1.1)
T2: 19.6±1.5 (2.00±0.15, 14.5±1.1)
T3: 24.5±2.0 (2.50±0.20, 18.1±1.4)

1) Install transfer case ② with extension assembly ①.
2) Secure selector arm to shifter arm with shifter fork screw ③. Shifter arm should be caught by pawl of rod. Selector arm must be engaged with reverse check sleeve assembly.
3) Adjustment of neutral position
   (1) Shift gear into 3rd gear position.
   (2) Shifter arm turns lightly toward the 1st/2nd gear side but heavily toward the reverse gear side because of the function of the return spring, until arm contacts the stopper.
   (3) Make adjustment so that the heavy stroke (reverse side) is a little more than the light stroke (1st/2nd side).
   (4) To adjust, remove bolts holding reverse check sleeve assembly ④ to the case, move sleeve assembly outward, and place adjustment shim (0 to 1 ea.) between sleeve assembly and case to adjust the clearance.

CAUTION:
Be careful not to break O-ring when placing shim(s).

Adjustment shim	
Part No.	Thickness mm (in)
32190AA000	0.15 (0.0059)
32190AA010	0.30 (0.0118)

● When shim is removed, the neutral position will move closer to reverse; when shim is added, the neutral position will move closer to 1st gear.
● If shims alone cannot adjust the clearance, replace reverse accent shaft and re-adjust.

Reverse accent shaft		
Part No.	Mark	Remarks
32188AA040	1	Neutral position is closer to 1st gear.
32188AA011	No mark or 2	Standard
32188AA050	3	Neutral position is closer to reverse gear.

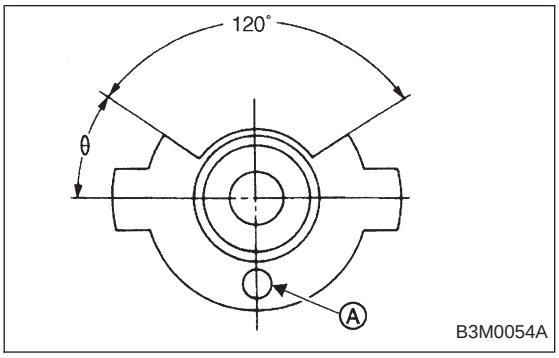

4) Reverse check plate ⑤ adjustment
Shift shifter arm to “5th” and then to reverse to see if reverse check mechanism operates properly. Also check to see if arm returns to neutral when released from the reverse position. If arm does not return properly, replace reverse check plate.

Reverse check plate			
Part No.	Ⓐ: No.	Angle θ	Remarks
32189AA000	0	28°	Arm stops closer to 5th gear.
32189AA010	1	31°	Arm stops closer to 5th gear.
32189AA020	2	34°	Arm stops in the center.
32189AA030	3	37°	Arm stops closer to reverse gear.
32189AA040	4	40°	Arm stops closer to reverse gear.

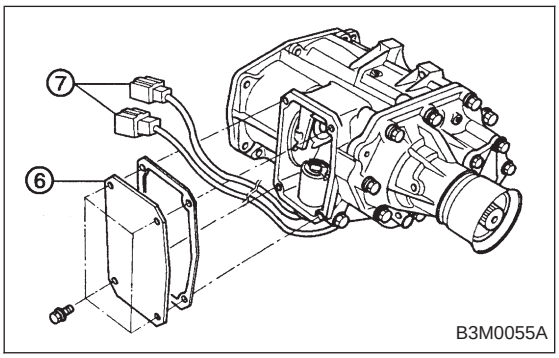

5) Install transfer ⑥ cover and gasket.
6) Connect each connector ⑦.