4. Transmission Case

A: DISASSEMBLY

1. SEPARATION OF TRANSMISSION

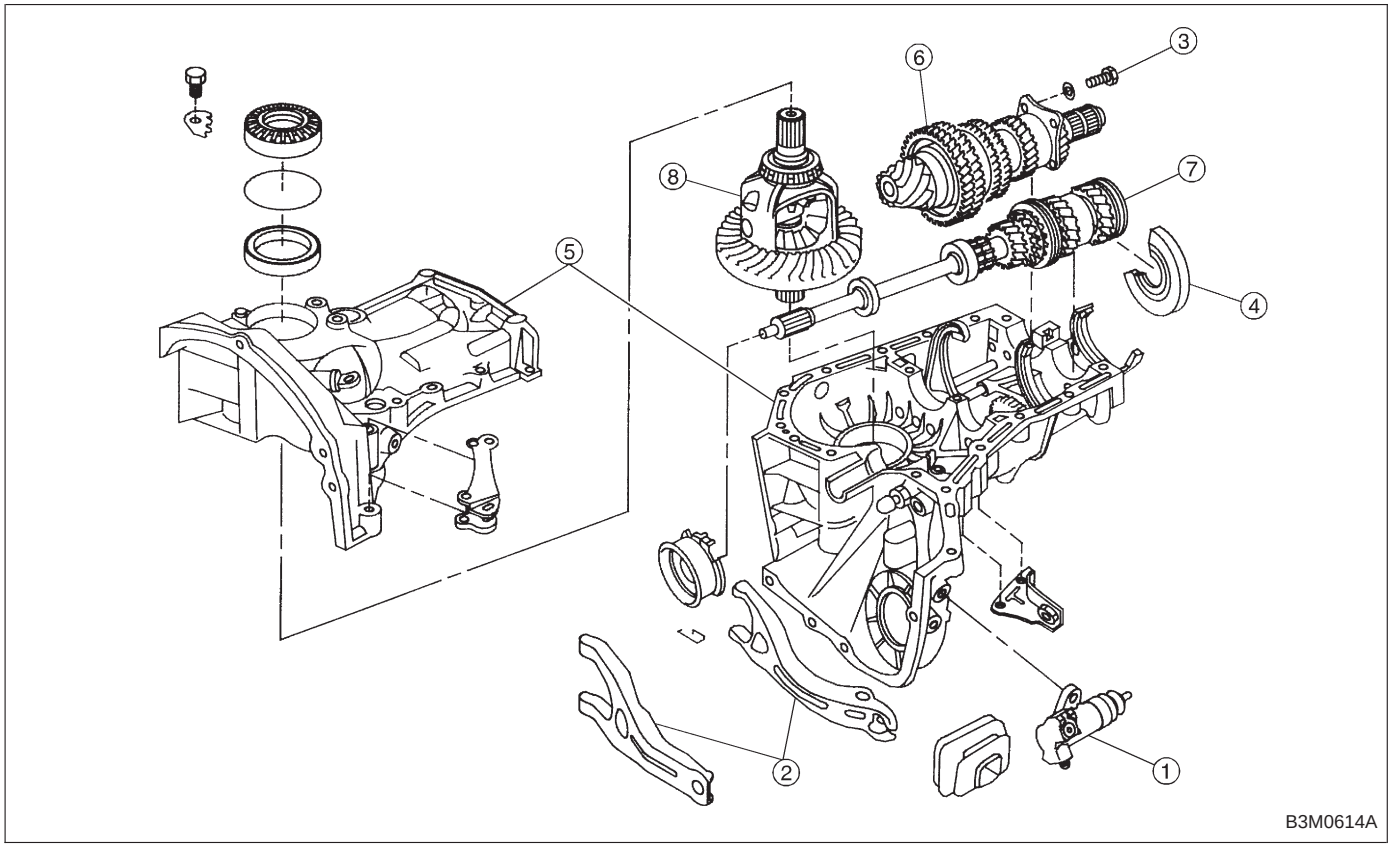

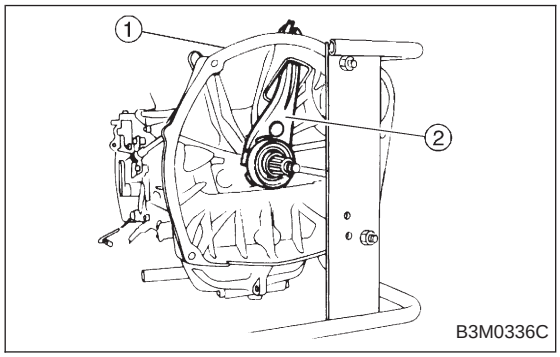

1) Remove operating cylinder (hydraulic application type) ① and clutch release lever ②. <Ref. to 2-10 [W3A1], [W3A2], [W5A0].>

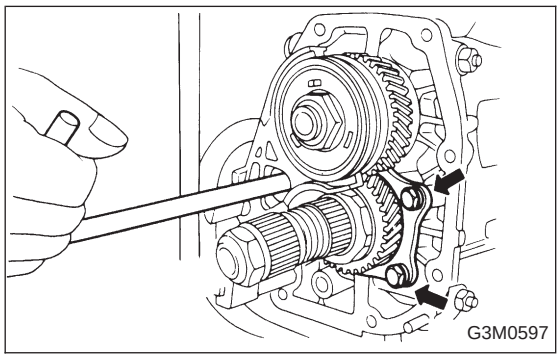

2) Remove bearing mounting bolts.

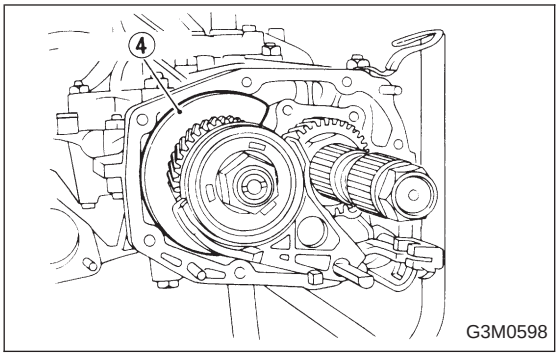

3) Remove main shaft rear plate ④.

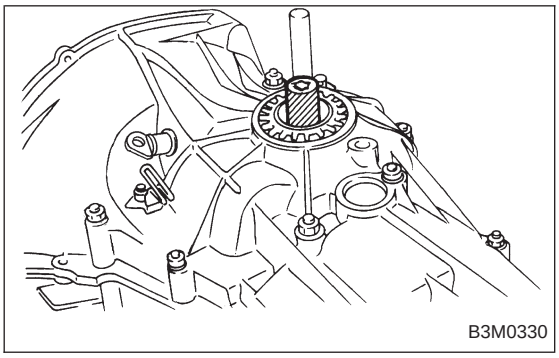

4) Separating transmission case

(1) Put vinyl tape around splines of right and left axle drive shafts to prevent damage to oil seals.

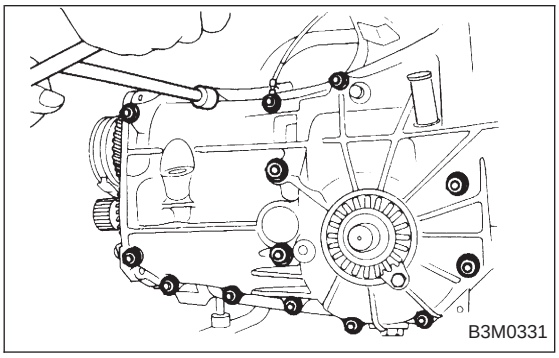

(2) Separate transmission case into right and left cases by loosening seventeen coupling bolts and nuts.

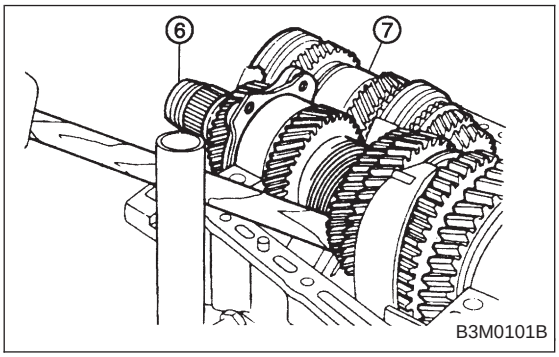

5) Remove drive pinion shaft assembly ⑥ from left side transmission case.

NOTE:
Use a hammer handle, etc. to remove if too tight.

6) Remove main shaft assembly ⑦.

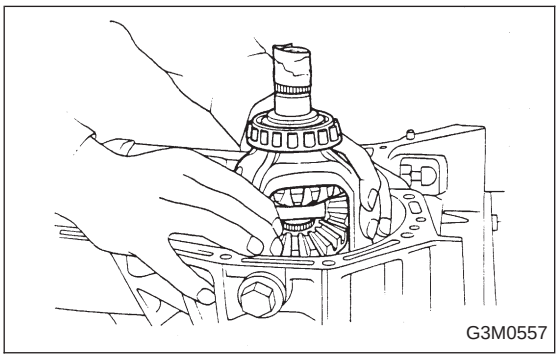

7) Remove differential assembly.

CAUTION:

- **Be careful not to confuse right and left roller bearing outer races.**
- **Be careful not to damage retainer oil seal.**

2. TRANSMISSION CASE

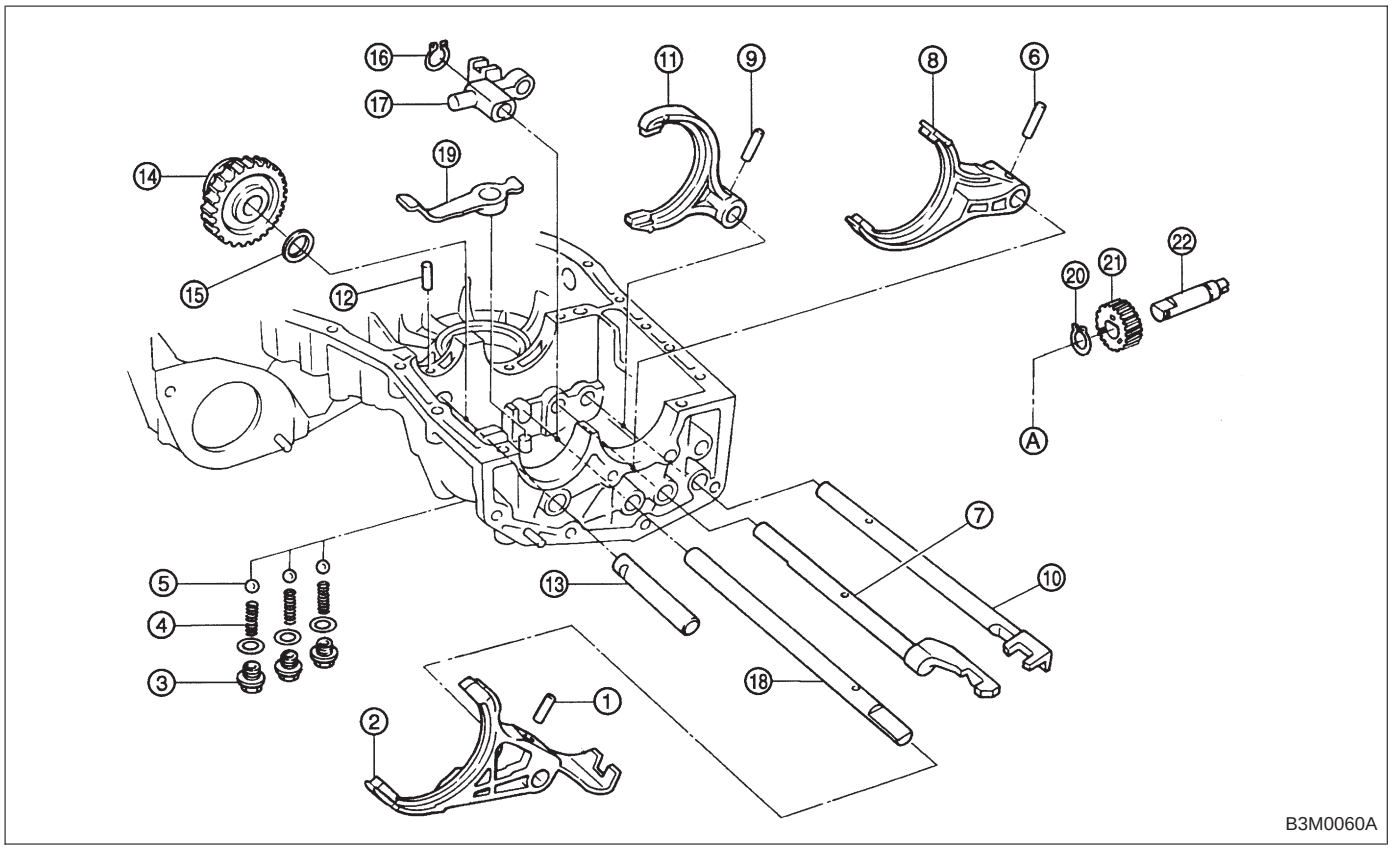

Ⓐ: Front right hand transmission case

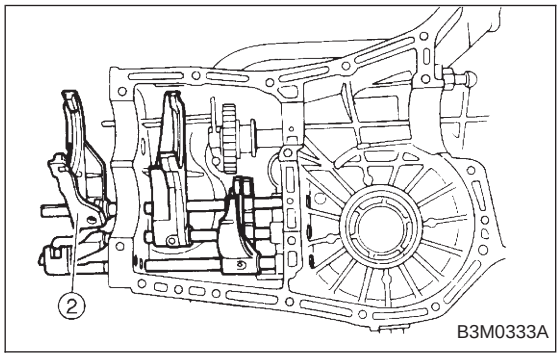

1) Drive out spring pin ① with ST, and remove 5th shifter fork ②.

ST 398791700 STRAIGHT PIN REMOVER

2) Remove plugs ③, springs ④ and checking balls ⑤.

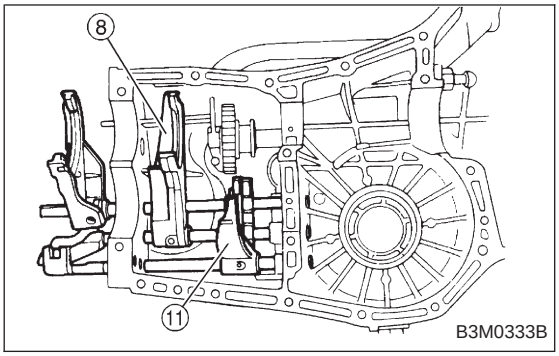

3) Drive out spring pin ⑥, and pull out 3-4 fork rod ⑦ and shifter fork ⑧.

NOTE:
When removing rod, keep other rods in neutral. Also, when pulling out straight pin, remove it toward inside of case so that it may not hit against case.

4) Drive out straight pin ⑨, and pull out 1-2 fork rod ⑩ and shifter fork ⑪.

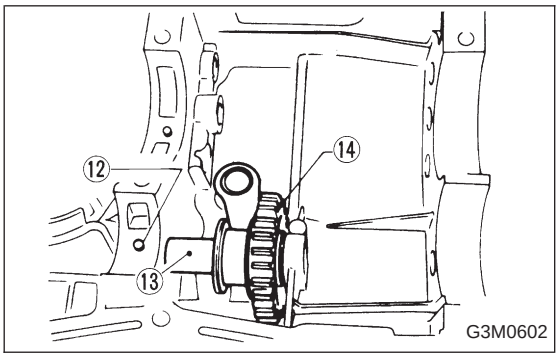

5) Pull out straight pin ⑫, and remove idler gear shaft ⑬, reverse idler gear ⑭ and washer ⑮.

6) Remove outer snap ring ⑯, and pull out reverse shifter rod arm ⑰ from reverse fork rod ⑱. Then take out ball, spring and interlock plunger from rod.
And then remove rod.

NOTE:
When pulling out reverse shifter rod arm, be careful not to let ball pop out of arm.

7) Remove reverse shifter lever ⑲.

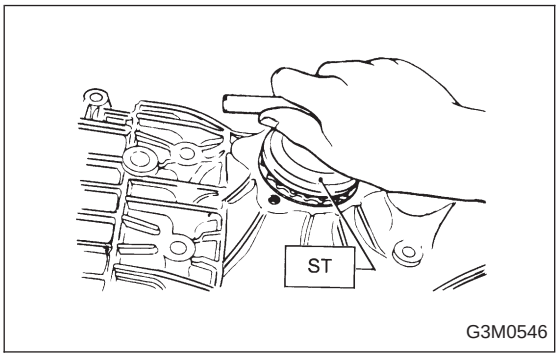

8) Remove differential side retainers using ST.

ST 499787000 WRENCH ASSY

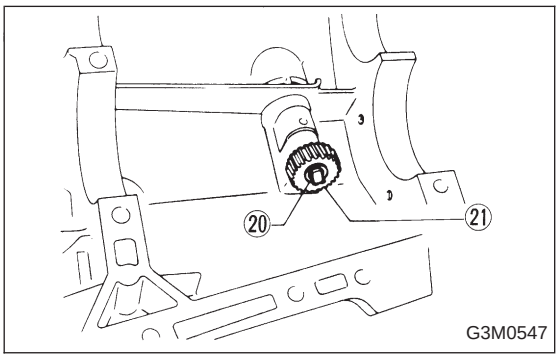

9) Remove outer snap ring ⑳ and pull out speedometer driven gear ㉑. Next, remove vehicle speed sensor 2, oil seal, speedometer shaft ㉒ and washer.

B: ASSEMBLY

1. TRANSMISSION CASE

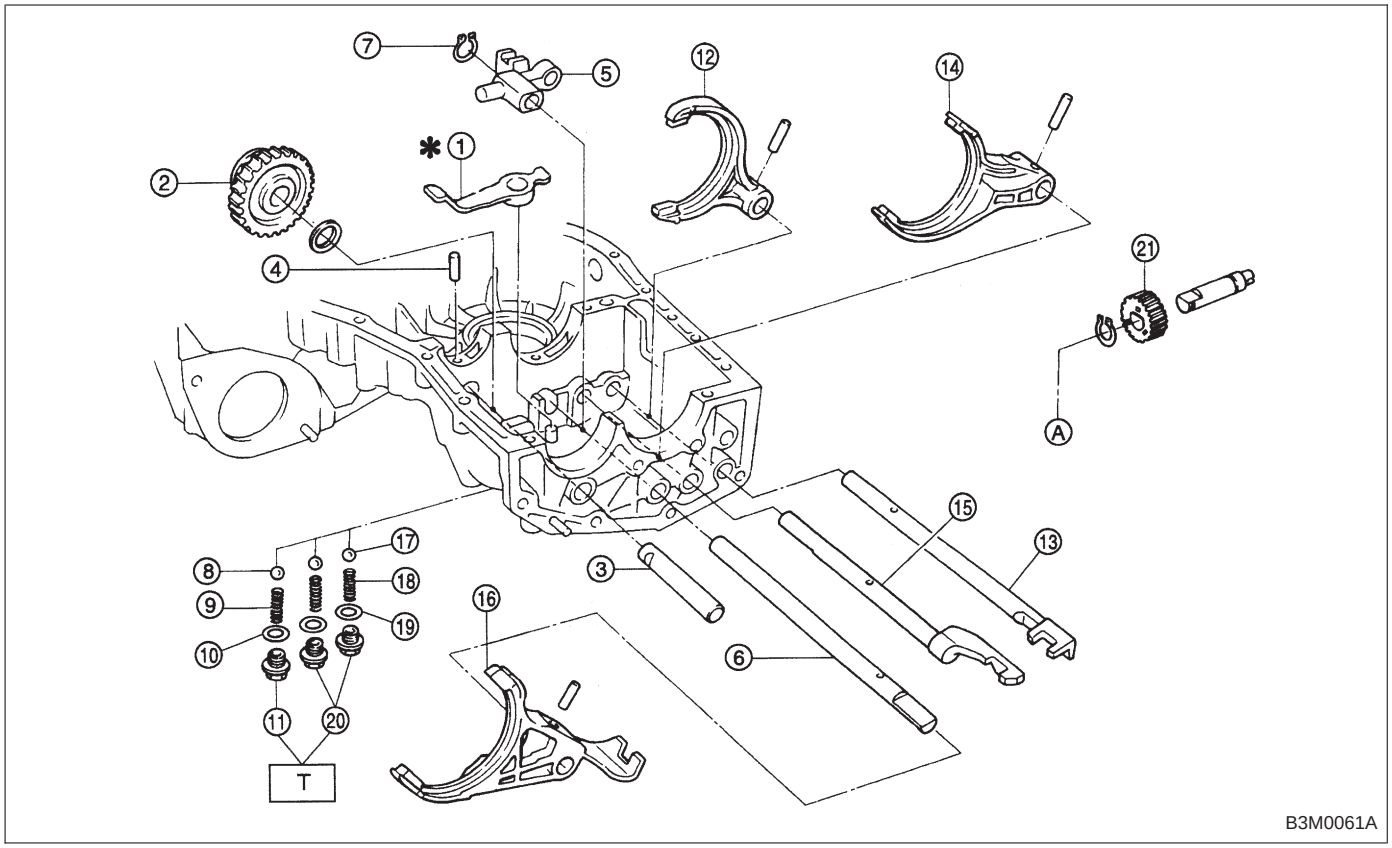

Ⓐ: To right hand transmission case

Tightening torque: N·m (kg-m, ft-lb)
T: 19.6±0.1 (2.00±0.015, 14.5±0.1)

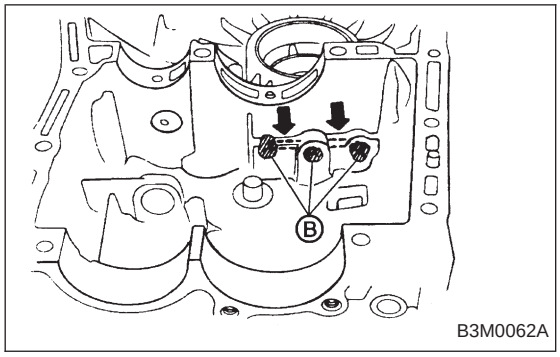

1) Position interlock plungers (5.56 x 19.6), one plunger in hole between 1-2 and 3-4 fork rod holes, and one plunger in hole between 3-4 and reverse fork rod holes.
Ⓑ: Rod holes

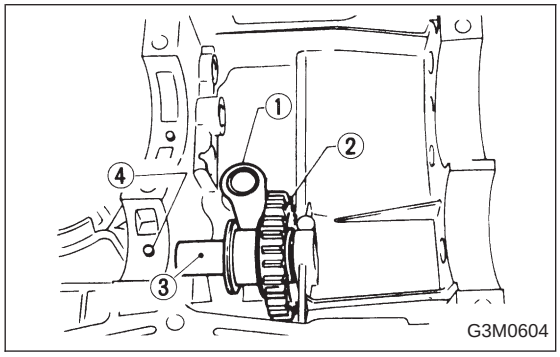

2) Install reverse shifter lever ①, reverse idler gear ② and reverse idler gear shaft ③, and secure with straight pin ④.

NOTE:
Be sure to install reverse idler shaft from the rear side.

3) Install reverse arm fork spring, ball and interlock plunger (5.56 x 19.6) to reverse fork rod arm ⑤. Insert reverse fork rod ⑥ into hole in reverse fork rod arm ⑤, and hold it with outer snap ring ⑦ using ST.

ST 399411700 ACCENT BALL INSTALLER

CAUTION:
Apply grease to plunger to prevent it from falling.

4) Position ball ⑧ (7.1438), spring ⑨ and gasket ⑩ in reverse shifter rod hole, on left side transmission case, and tighten checking ball plug ⑪.

CAUTION:
Replace gasket with a new one.

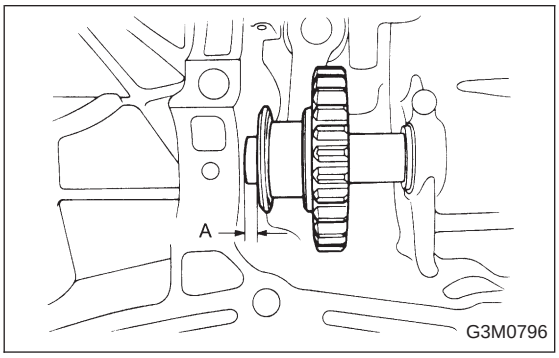

5) Adjustment of reverse idler gear position

(1) Move reverse shifter rod toward REV side. Adjust clearance between reverse idler gear and transmission case wall, using reverse shifter lever ①.

Clearance A:
6.0 — 7.5 mm (0.236 — 0.295 in)

Reverse shifter lever		
Part No.	No.	Remarks
32820AA000	0	Further from case wall
32820AA010	No mark	Standard
32820AA020	2	Closer to case wall

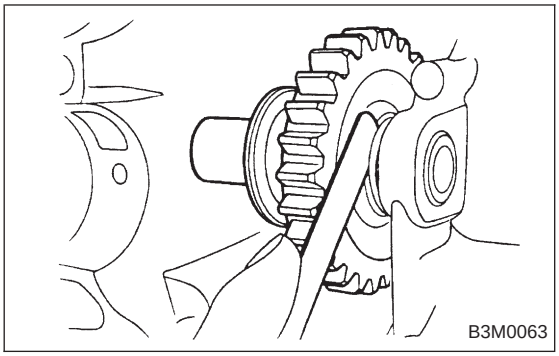

(2) After installing a suitable reverse shifter lever, shift into neutral. Using a thickness gauge, measure clearance between reverse idler gear and transmission case wall and adjust with washer(s).

Clearance:
0 — 0.5 mm (0 — 0.020 in)

Washer (20.5 x 26 x t)	
Part No.	Thickness mm (in)
803020151	0.4 (0.016)
803020152	1.1 (0.043)
803020153	1.5 (0.059)
803020154	1.9 (0.075)
803020155	2.3 (0.091)

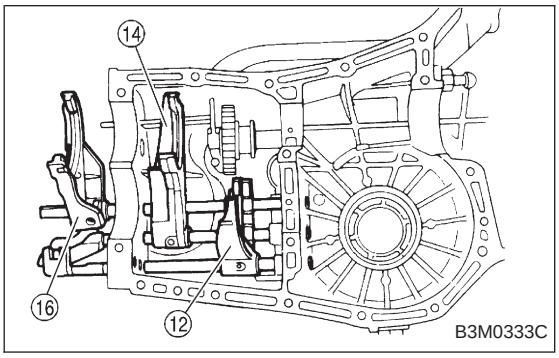

6) Installation of 1-2 shifter fork ⑫ and rod ⑬

(1) Install 1-2 fork rod into 1-2 shifter fork via the hole on the rear of transmission case.

(2) Align the holes in rod and fork, and drive straight pin (6 x 22) into these holes using ST.

ST 398791700 STRAIGHT PIN REMOVER

NOTE:
- Set other rods to neutral.
- Make sure interlock plunger (5.56 x 19.6) is on the 3-4 fork rod side.

7) Installation of 3-4 shifter fork ⑭ and rod ⑮

(1) Install interlock plunger (3 x 11.9) onto 3-4 fork rod.

CAUTION:
Apply a coat of grease to plunger to prevent it from falling.

(2) Install 3-4 fork rod into 3-4 shifter fork via the hole on the rear of transmission case.

(3) Align the holes in rod and fork, and drive straight pin (6 x 22) into these holes.

ST 398791700 STRAIGHT PIN REMOVER

NOTE:
- Set reverse fork rod to neutral.
- Make sure interlock plunger (installed before) is on the reverse fork rod side.

8) Install 5th shifter fork ⑯ onto the rear of reverse fork rod ⑥. Align holes in the two parts and drive straight pin into place.

ST 398791700 STRAIGHT PIN REMOVER

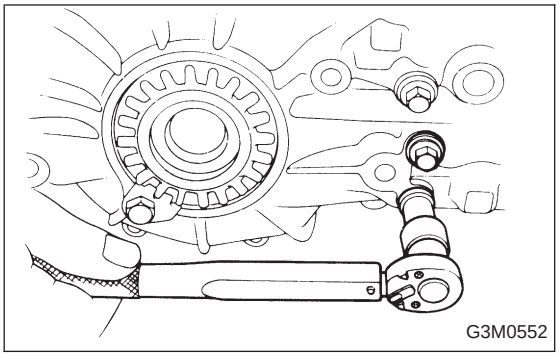

9) Position balls ⑰, checking ball springs ⑱ and gaskets ⑲ into 3-4 and 1-2 rod holes, and install plugs ⑳.

CAUTION:
Replace gasket with a new one.

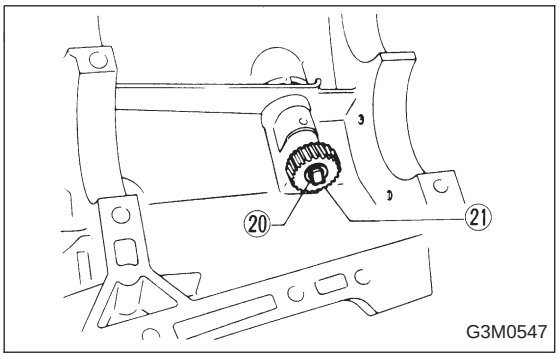

10) Installation of speedometer driven gear ㉑

(1) Install washer and speedometer shaft, and press fit oil seal with ST.

ST 899824100 or 499827000 PRESS

CAUTION:
Use new oil seal, if it has been removed.

(2) Install vehicle speed sensor 2.

CAUTION:
Use new vehicle speed sensor 2, if it has been removed.

Tightening torque:
5.9±1.5 N·m (60±15 kg-cm, 52±13 in-lb)

(3) Install speedometer driven gear and snap ring.

2. COMBINATION OF TRANSMISSION CASE

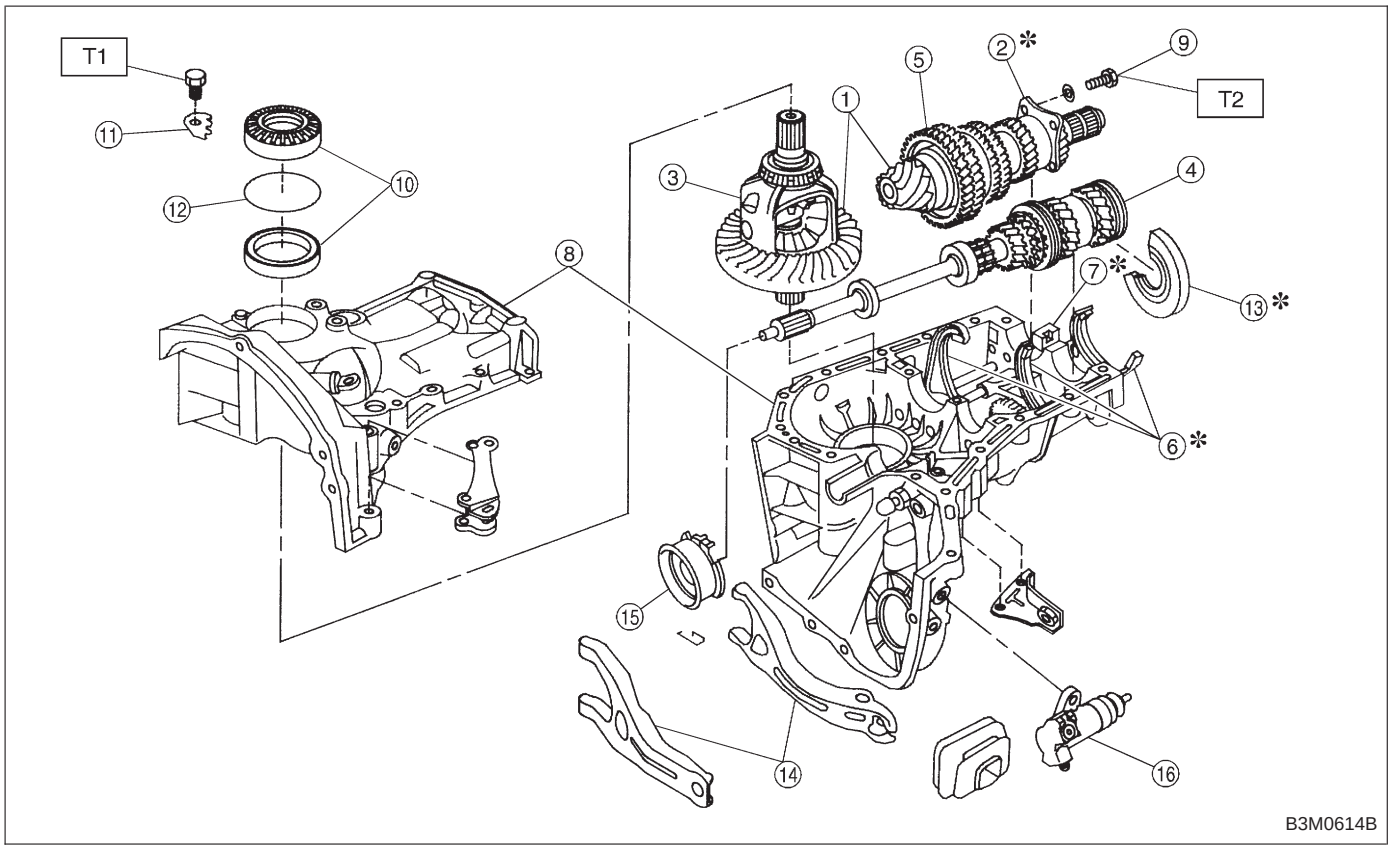

Tightening torque: N·m (kg-m, ft-lb)
T1: 25 (2.5, 18)
T2: 29±3 (3.0±0.3, 21.7±2.2)

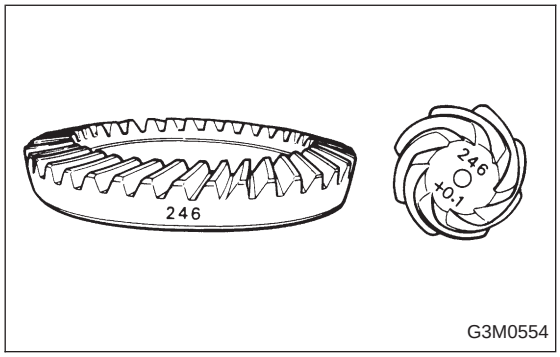

1) Alignment marks/numbers on hypoid gear set ①
The upper number on driven pinion is the match number for combining it with hypoid driven gear. The lower number is for shim adjustment. If no lower number is shown, the value is zero. The number on hypoid driven gear indicates a number for combination with drive pinion.

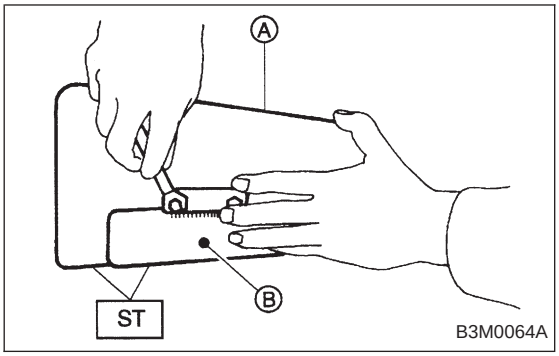

2) Adjustment of drive pinion shim ②

(1) Place drive pinion shaft assembly on right hand transmission main case without shim and tighten bearing mounting bolts.

(2) Inspection and adjustment of ST

NOTE:

- Loosen the two bolts and adjust so that the scale indicates 0.5 correctly when the plate end and the scale end are on the same level.
- Tighten the two bolts.

ST 499917500 DRIVE PINION GAUGE ASSY

Ⓐ: Plate
Ⓑ: Scale

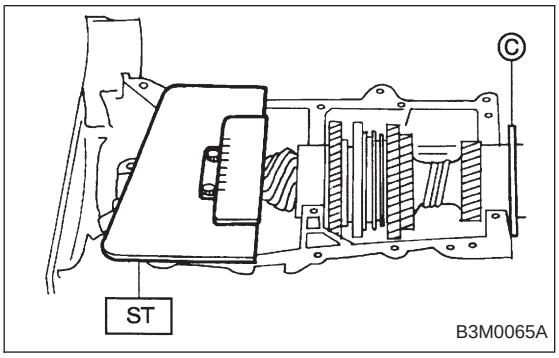

(3) Position the ST by inserting the knock pin of ST into the knock hole in the transmission case.

(4) Slide the drive pinion gauge scale with finger tip and read the value at the point where it matches with the end face of drive pinion.

Ⓒ: Adjust clearance to zero without shim.

(5) The thickness of shim shall be determined by adding the value indicated on drive pinion to the value indicated on the ST. (Add if the number on drive pinion is prefixed by + and subtract if the number is prefixed by −.)

ST 499917500 DRIVE PINION GAUGE ASSY

Select one to three shims from the next table for the value determined as described above and take a shim thickness which is closest to the said value.

Drive pinion shim	
Part No.	Thickness mm (in)
32295AA031	0.150 (0.0059)
32295AA041	0.175 (0.0069)
32295AA051	0.200 (0.0079)
32295AA061	0.225 (0.0089)
32295AA071	0.250 (0.0098)
32295AA081	0.275 (0.0108)
32295AA091	0.300 (0.0118)
32295AA101	0.500 (0.0197)

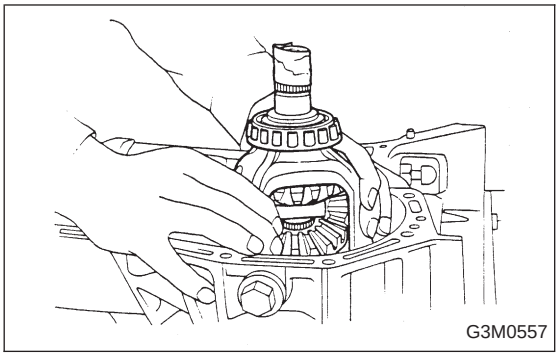

3) Install differential assembly ③ on left hand transmission case.

CAUTION:
Be careful not to fold the sealing lip of oil seal.

NOTE:
Wrap the left and right splined sections of axle shaft with vinyl tape to prevent scratches.

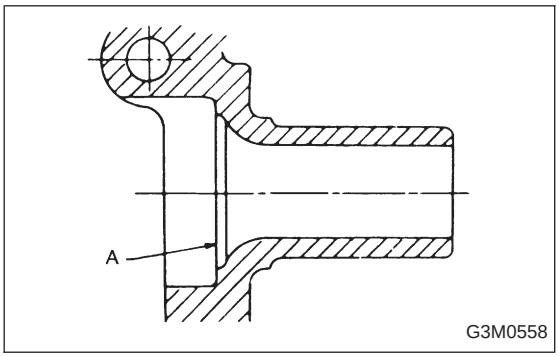

4) Install needle bearing and oil seal onto the front of transmission main shaft assembly ④, and position in left side transmission case.

CAUTION:
- **Wrap clutch splined section with vinyl tape to prevent damage to oil seal.**
- **Apply grease (Unilube #2 or equivalent) to the sealing lip of oil seal.**

NOTE:
- Align the end face of seal with surface A of left side transmission main case when installing oil seal.
- Be careful not to drop oil seal when installing right side transmission main case.
- Make sure straight pin is positioned in hole in needle bearing's outer race.

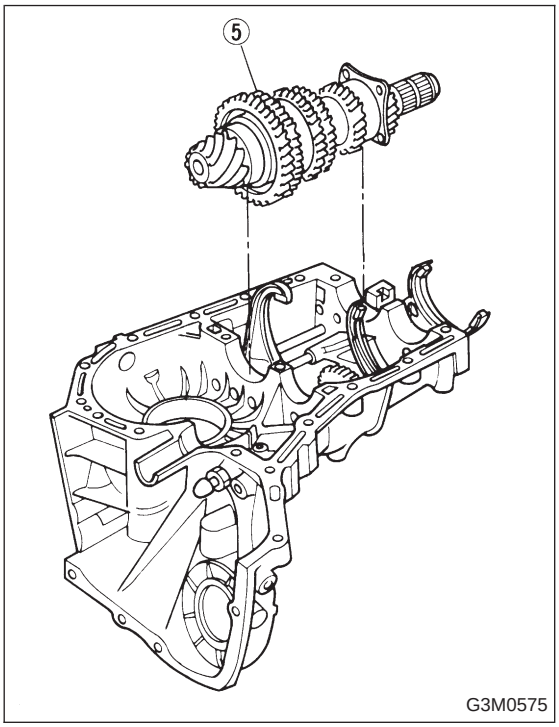

5) Install drive pinion shaft assembly ⑤ with shims selected before into transmission case.

NOTE:
Ensure that the knock pin of the case is fitted into the hole in the bearing outer race.

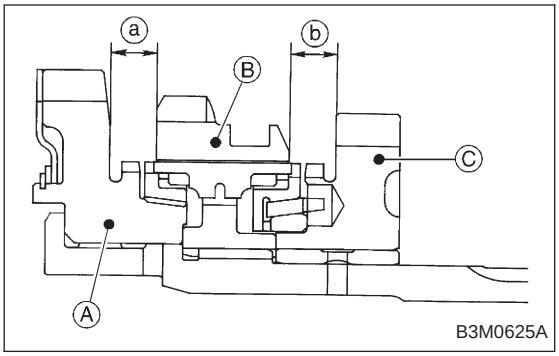

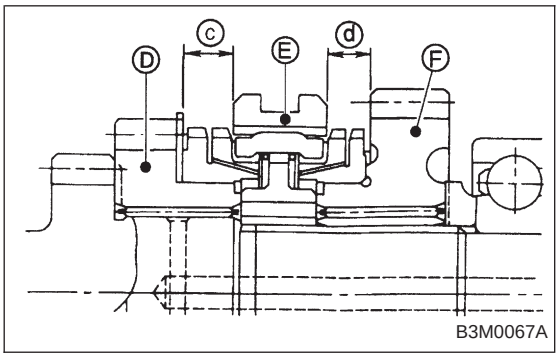

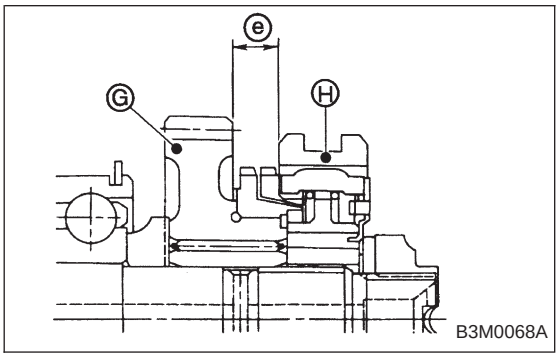

6) Selection of suitable 1st-2nd, 3rd-4th and 5th shifter fork

Set transmission main shaft assembly and drive pinion shaft assembly in position (so there is no clearance between the two when moved all the way to the front). Select suitable 1st-2nd, 3rd-4th and 5th shifter fork so that coupling sleeve and reverse driven gear are positioned in the center of their synchronizing mechanisms.

	Clearance mm (in)
1st driven gear Ⓐ to reverse driven gear Ⓑ	ⓐ: 9.5 (0.374)
2nd driven gear Ⓒ to reverse driven gear Ⓑ	ⓑ: 9.5 (0.374)
3rd drive gear Ⓓ to coupling sleeve Ⓔ	ⓒ: 9.3 (0.366)
4th drive gear Ⓕ to coupling sleeve Ⓔ	ⓓ: 9.3 (0.366)
5th drive gear Ⓖ to coupling sleeve Ⓗ	ⓔ: 9.3 (0.366)

1st-2nd shifter fork		
Part No.	No.	Remarks
32804AA060	1	Approach to 1st gear by 0.2 mm (0.008 in)
32804AA070	No mark	Standard
32804AA080	3	Approach to 2nd gear by 0.2 mm (0.008 in)
3rd-4th shifter fork		
Part No.	No.	Remarks
32810AA060	1	Approach to 4th gear by 0.2 mm (0.008 in)
32810AA070	No mark	Standard
32810AA100	3	Approach to 3rd gear by 0.2 mm (0.008 in)
5th shifter fork		
Part No.	No.	Remarks
32812AA200	4	Approach to 5th gear by 0.2 mm (0.008 in)
32812AA210	No mark	Standard
32812AA220	5	Become distant from 5th gear by 0.2 mm (0.008 in)

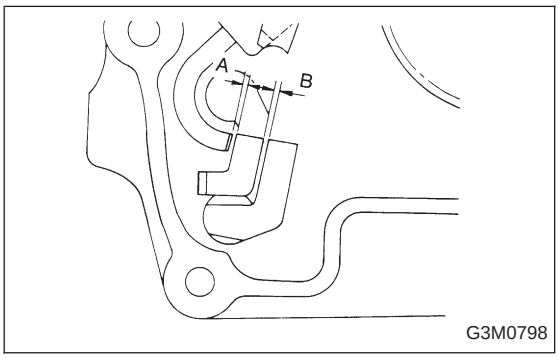

7) Inspection of rod end clearance

Measure rod end clearances A and B. If any clearance is not within specifications, replace rod or fork as required.

A: 1st-2nd to 3rd-4th	0.4 — 1.4 mm (0.016 — 0.055 in)
B: 3rd-4th to 5th	0.5 — 1.3 mm (0.020 — 0.051 in)

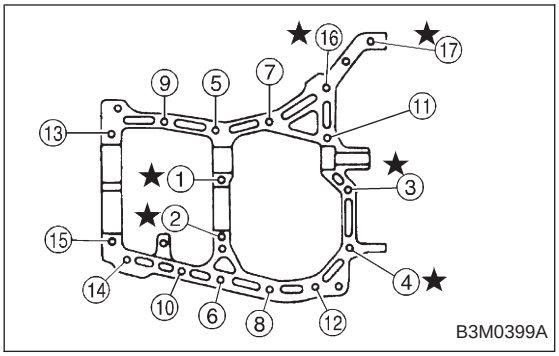

8) Combination of transmission case

(1) Wipe off grease, oil and dust on the mating surfaces of transmission cases with white gasoline, and apply liquid gasket, and then put case right side and left side together.

Liquid gasket:

THREE BOND 1215 or equivalent

(2) Tighten 17 bolts with bracket, clip, etc. as shown in the figure.

Tightening torque:

8 mm bolt

25±2 N·m (2.5±0.2 kg-m, 18.1±1.4 ft-lb)

★ 10 mm bolt

39±3 N·m (4.0±0.3 kg-m, 28.9±2.2 ft-lb)

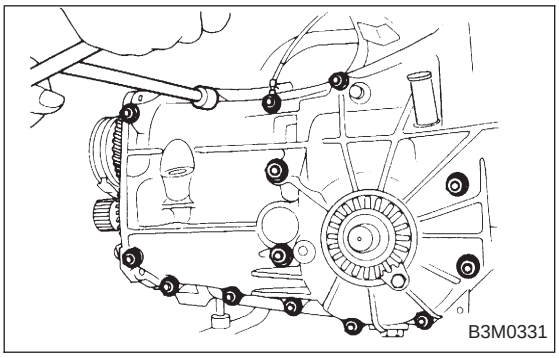

NOTE:

- Insert bolts from the bottom and tighten nuts at the top.
- Put cases together so that drive pinion shim and input shaft holder shim are not caught up in between.
- Confirm that counter gear and speedometer gear are meshed.

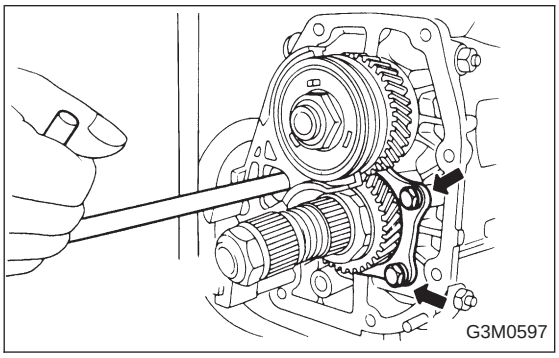

9) Tighten ball bearing attachment bolts.

Tightening torque:

29±3 N·m (3.0±0.3 kg-m, 21.7±2.2 ft-lb)

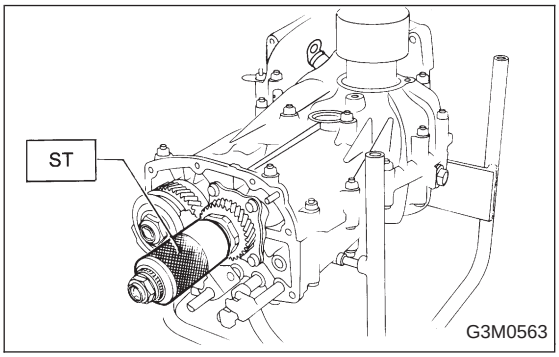

10) Backlash adjustment of hypoid gear and preload adjustment of roller bearing

NOTE:

Support drive pinion assembly with ST.

ST 498427100 STOPPER

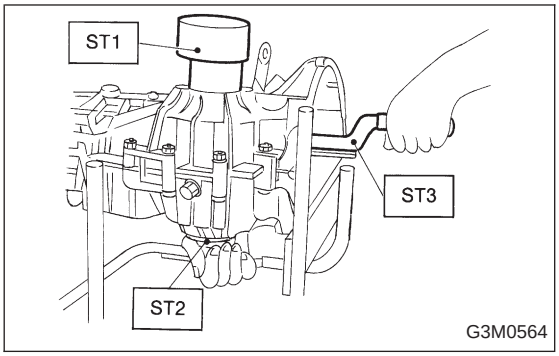

(1) Place the transmission with case left side facing downward and put ST1 on bearing cup.
(2) Screw retainer assembly into left case from the bottom with ST2. Fit ST3 on the transmission main shaft. Shift gear into 4th or 5th and turn the shaft several times. Screw in the retainer while turning ST3 until a slight resistance is felt on ST2.
This is the contact point of hypoid gear and drive pinion shaft. Repeat the above sequence several times to ensure the contact point.

ST1	399780104	WEIGHT
ST2	499787000	WRENCH ASSY
ST3	499927100	HANDLE

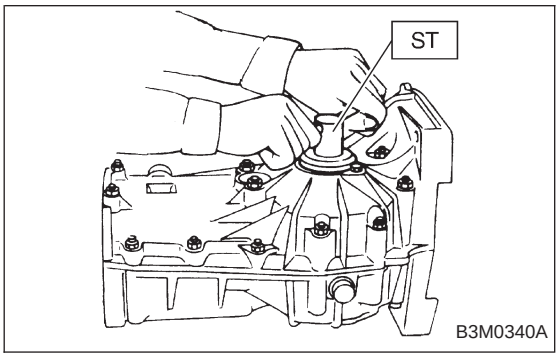

(3) Remove weight and screw in retainer without O-ring on the upper side and stop at the point where slight resistance is felt.

NOTE:
At this point, the backlash between the hypoid gear and drive pinion shaft is zero.

ST	499787000	WRENCH ASSY

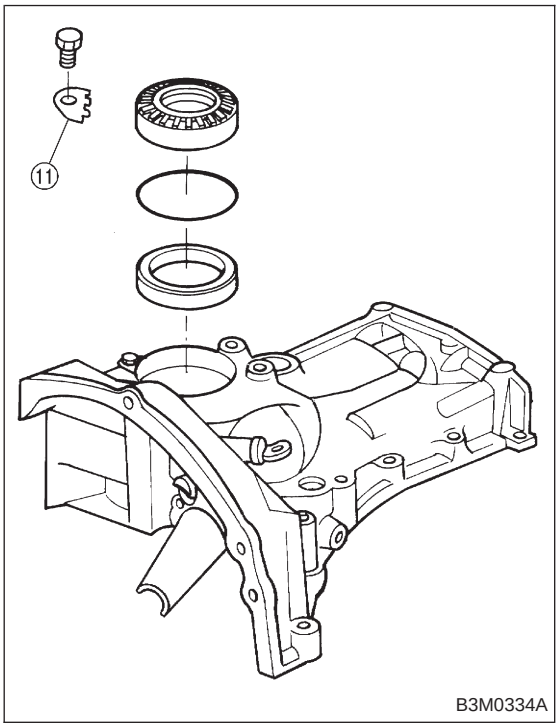

(4) Fit lock plate ⑪. Loosen the retainer on the lower side by 1-1/2 notches of lock plate and turn in the retainer on the upper side by the same amount in order to obtain the backlash.

NOTE:
The notch on the lock plate moves by 1/2 notch if the plate is turned upside down.

(5) Turn in the retainer on the upper side additionally by 1 notch in order to apply preload on taper roller bearing.
(6) Tighten temporarily both the upper and lower lock plates and mark both holder and lock plate for later readjustment.
(7) Turn transmission main shaft several times while tapping around retainer lightly with plastic hammer.
(8) Set ST1 and ST2. Insert the needle through transmission oil drain plug hole so that the needle comes in contact with the tooth surface at a right angle and check the backlash.

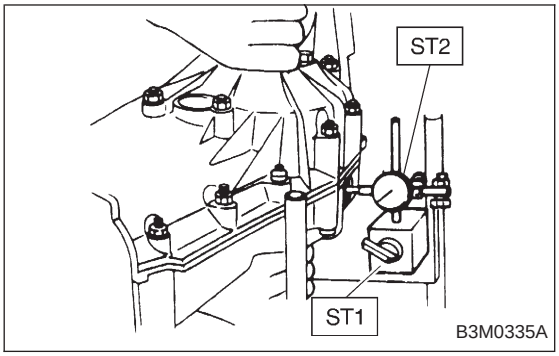

ST1 498247001 MAGNET BASE
ST2 498247100 DIAL GAUGE

Backlash:
0.13 — 0.18 mm (0.0051 — 0.0071 in)

NOTE:
- If backlash is outside specified range, adjust it by turning holder in right side case.
- Each time holder rotates one tooth, backlash changes by 0.05 mm (0.0020 in).

(9) Check tooth contact of hypoid gear as follows: Apply a uniform thin coat of red lead on both tooth surfaces of 3 or 4 teeth of the hypoid gear. Move the hypoid gear back and forth by turning the transmission main shaft until a definite contact pattern is developed on hypoid gear, and judge whether face contact is correct. If it is incorrect, make the following correction.

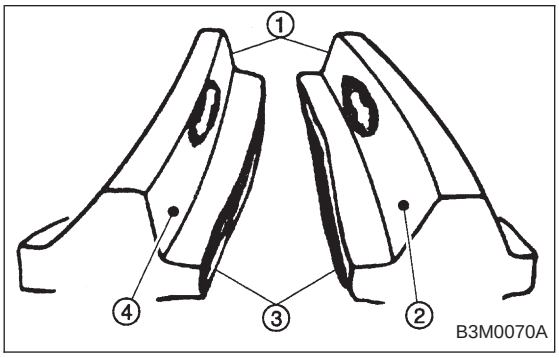

- Tooth contact is correct.

① Toe
② Coast side
③ Heel
④ Drive side

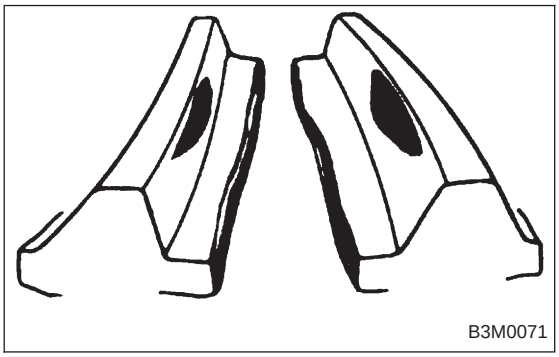

- Backlash is excessive.

To reduce backlash, loosen holder on the upper side (case right side) and turn in the holder on the lower side (case left side) by the same amount.

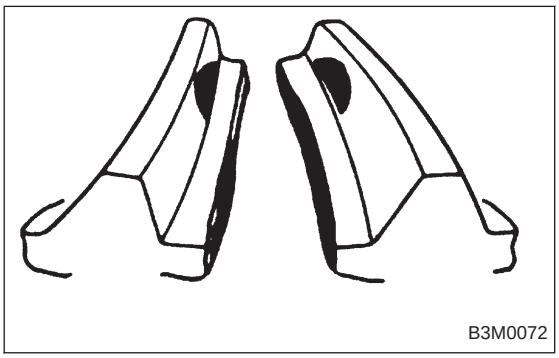

- Backlash is insufficient.

To increase backlash, loosen holder on the lower side (case left side) and turn in the holder on the upper side (case right side) by the same amount.

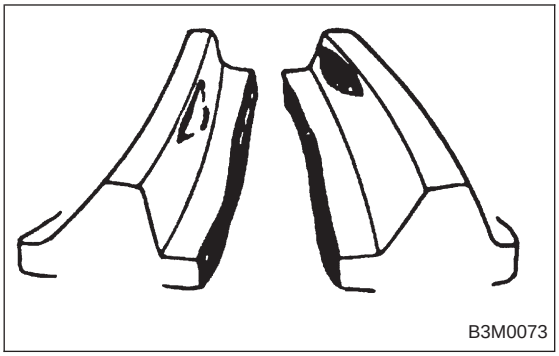

● The drive pinion shim selected before is too thick. Reduce its thickness.

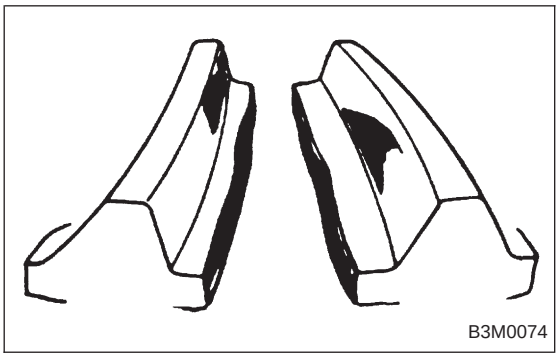

● The drive pinion shim selected before is too thin. Increase its thickness.

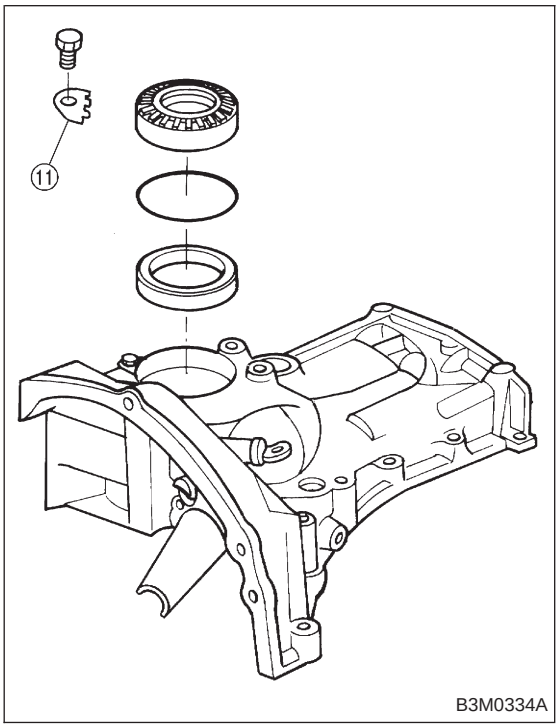

11) After checking the tooth contact of hypoid gears, remove the lock plate ⑪. Then loosen retainer until the O-ring groove appears. Fit O-ring into the groove and tighten retainer into the position where retainer has been tightened in.
Tighten lock plate ⑪.

Tightening torque:
25±3 N·m (2.5±0.3 kg-m, 18.1±2.2 ft-lb)

NOTE:
Carry out this job on both upper and lower retainers.

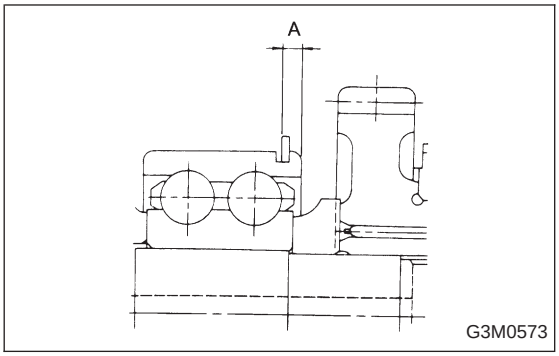

12) Selecting of main shaft rear plate
Using ST, measure the amount A of ball bearing protrusion from transmission main case surface and select the proper plate in the following table:

ST 498147000 DEPTH GAUGE

Dimension "A" mm (in)	Part No.	Mark
4.00 — 4.13 (0.1575 — 0.1626)	32294AA041	1
3.87 — 3.99 (0.1524 — 0.1571)	32294AA051	2

NOTE:
Before measuring, tap the end of main shaft with a plastic hammer lightly in order to make the clearance zero between the main case surface and the moving flange of bearing.

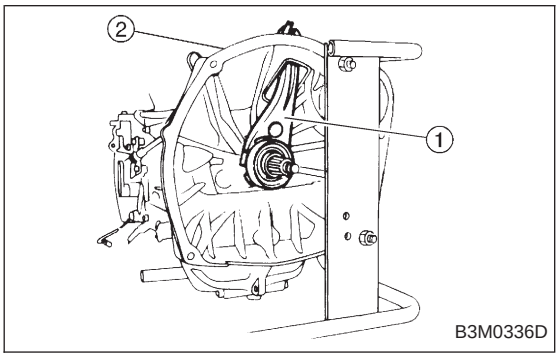

13) Install clutch release lever ① and operating cylinder (hydraulic application type) ②. <Ref. to 2-10 [W3C1], [W3C2], [W5A0].>

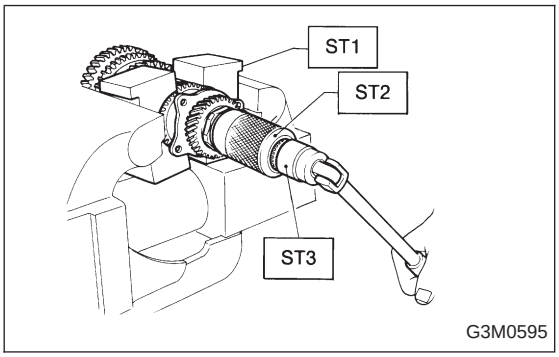

5. Drive Pinion Assembly (AWD Model)

A: DISASSEMBLY

1. DRIVE PINION SHAFT

1) Straighten lock nut at staked portion. Remove the lock nut using ST1, ST2 and ST3.

ST1 899884100 HOLDER
ST2 498427100 STOPPER
ST3 899988608 SOCKET WRENCH

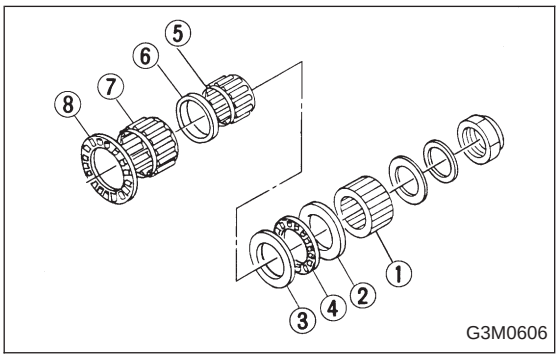

2) Withdraw drive pinion from driven shaft.
Remove differential bevel gear sleeve ①, adjusting washer No. 1 ② (25 x 37.5 x t), adjusting washer No. 2 ③ (25 x 37.5 x 4), thrust bearing ④ (25 x 37.5 x 3), needle bearing ⑤ (25 x 30 x 20), drive pinion collar ⑥, needle bearing ⑦ (30 x 37 x 23) and thrust bearing ⑧ (33 x 50 x 3).