1. Manual Transmission

A: REMOVAL

1) Remove console box. <Ref. to 5-4 [W1A0].>

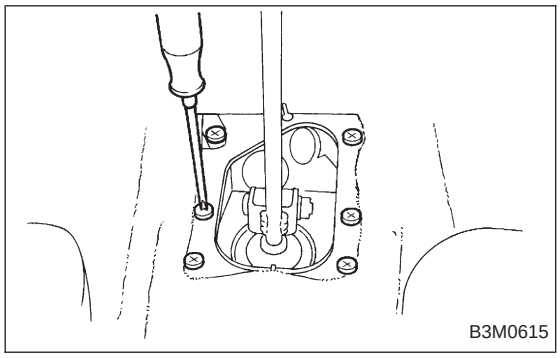

2) Remove boot plate from the body.

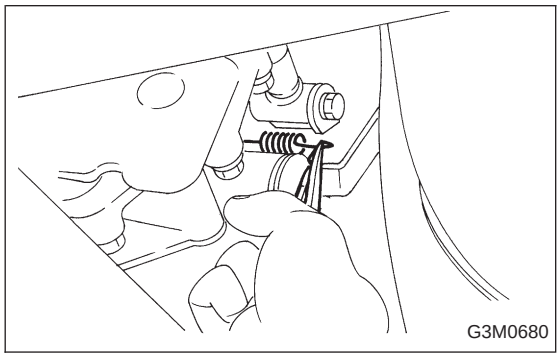

3) Remove the spring between the joint and bracket.

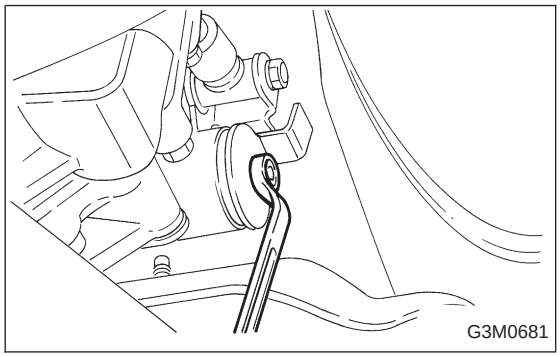

4) Remove stay from bracket.

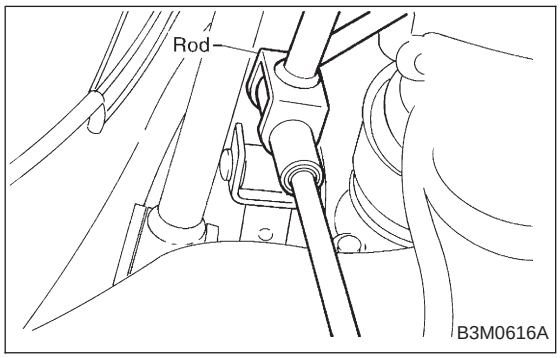

5) Remove rod from joint.

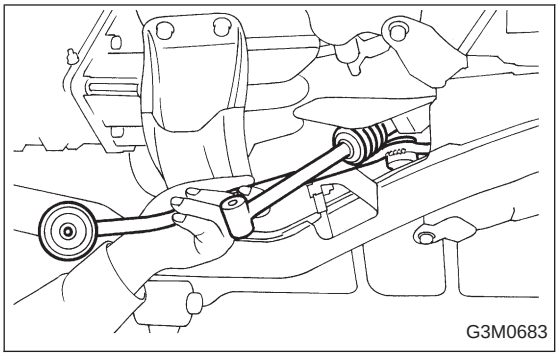

6) Remove gearshift lever.

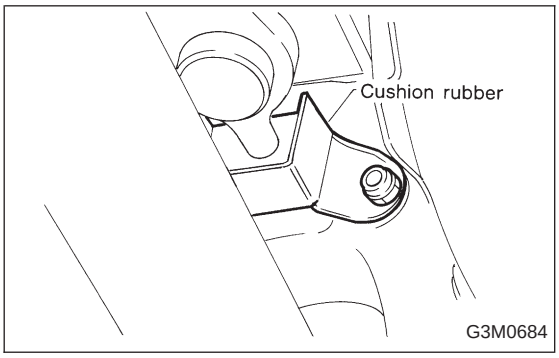

7) Remove the exhaust cover and remove cushion rubber from the body.

B: DISASSEMBLY

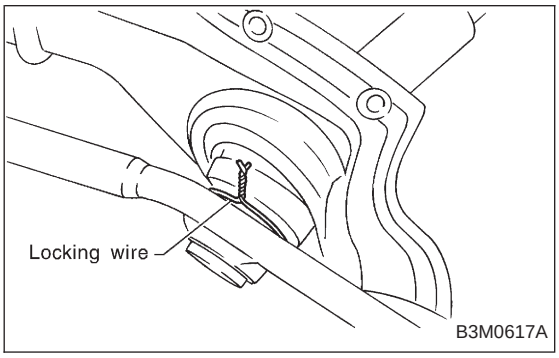

1) Disconnect locking wire.

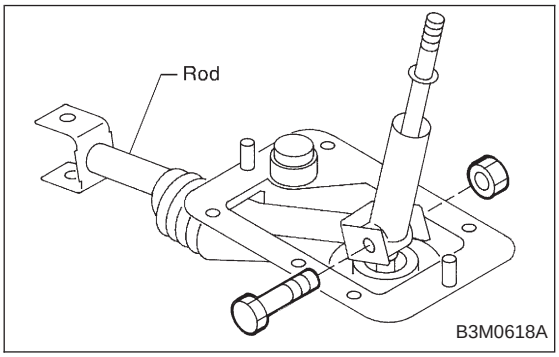

2) Remove rod from gearshift lever.

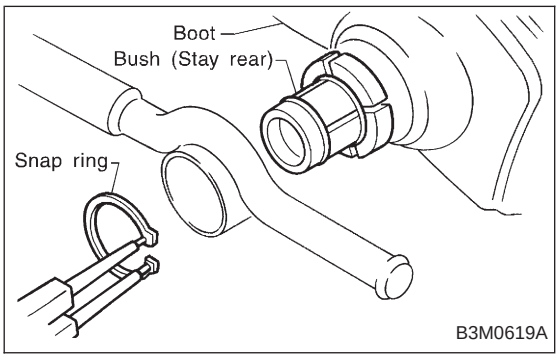

3) Remove snap ring, then disconnect gearshift lever from stay.
4) Remove boot from gearshift lever.

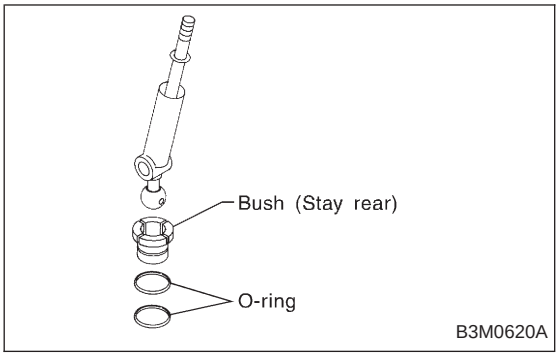

5) Remove O-ring, then disconnect bush (Stay rear).

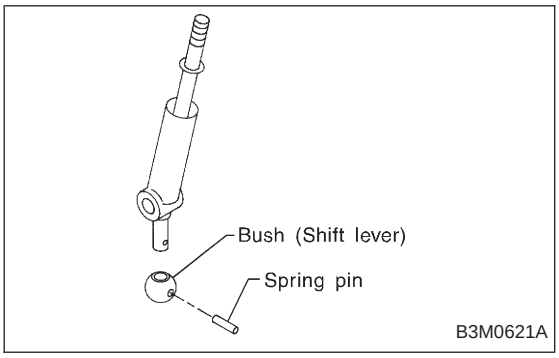

6) Draw out spring pin, then remove bush (Shift lever) from gearshift lever.

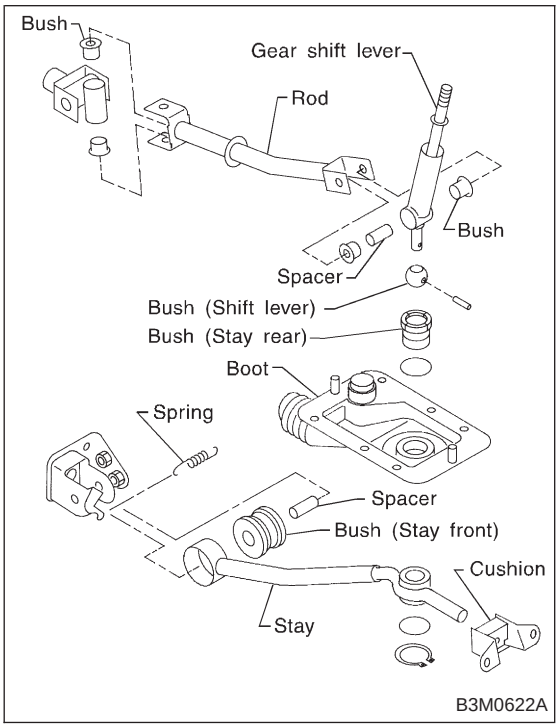

C: INSPECTION

Check each parts (Bush, cushion, spacer, boot, spring, stay and rod etc.) for deformation, damage and wear. Repair or replace any defective parts. Determine defective parts by comparing with new parts.

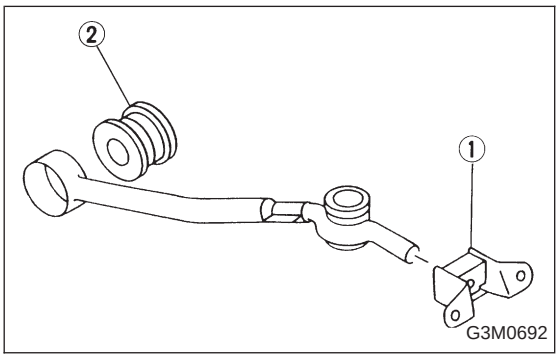

D: ASSEMBLY

1) Clean all parts before assembly.
2) Mount the following parts on the stay.
① Cushion rubber
② Bush (Stay front)

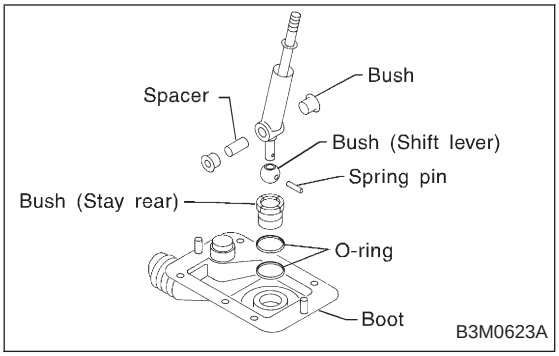

3) Mount each parts (Boot, O-ring, bush and spacer) on the gearshift lever.

CAUTION:
- **Always use new O-rings.**
- **Apply grease [NIGTIGHT LYW No.2 or equivalent] to the inner and side surfaces of the bush when installing spacer.**

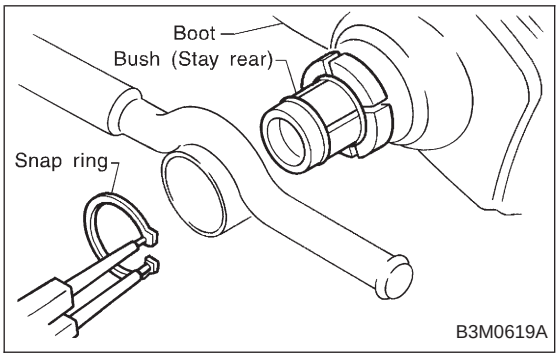

4) Insert the gearshift lever into the boot hole.
5) Mount gearshift lever on the stay.
6) Install snap ring to the bottom of the bush (Stay rear).

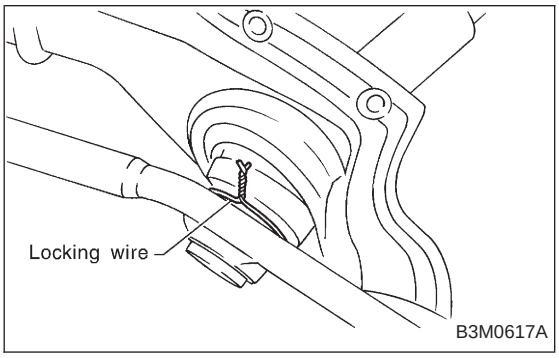

7) Tighten with locking wire to the extent that the boot will not come off.

CAUTION:
Always use new locking wire.

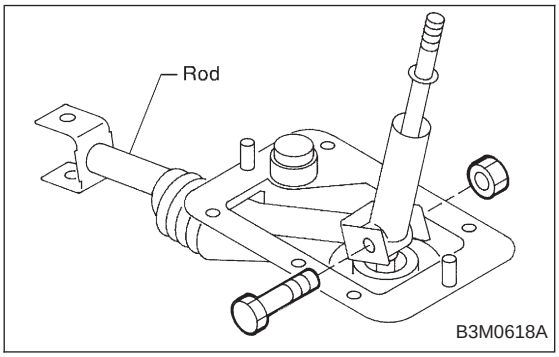

8) Insert the rod into the boot hole.
9) Connect rod to gearshift lever.

Tightening torque:
12±3 N·m (1.2±0.3 kg-m, 8.7±2.2 ft-lb)

Rocking torque:
0.74±0.25 N·m (0.075±0.025 kg-m, 0.54±0.18 ft-lb) or less

10) Check that there is no excessive play and that parts move smoothly.

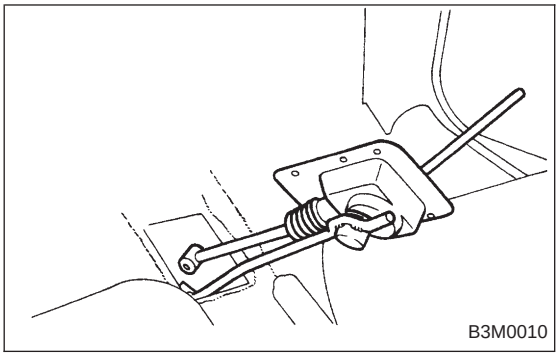

E: INSTALLATION

1) Put into gearshift lever from passenger compartment.
2) Mount boot plate on the body.
3) Install console box and gearshift knob. <Ref. to 5-4 [W1B0].>

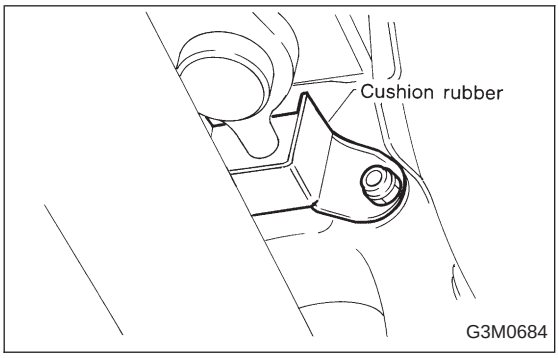

4) Mount cushion rubber on the body.

Tightening torque:
18±5 N·m (1.84±0.51 kg-m, 13.3±3.7 ft-lb)

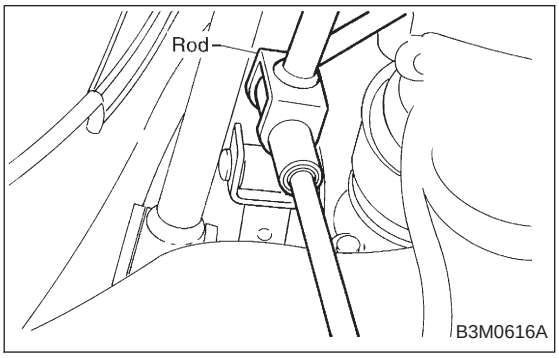

5) Connect rod to the joint.

Tightening torque:
FWD model
12±3 N·m (1.2±0.3 kg-m, 8.7±2.2 ft-lb)
AWD model
18±5 N·m (1.84±0.51 kg-m, 13.3±3.7 ft-lb)

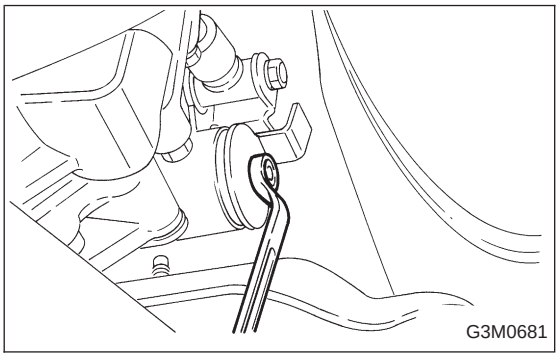

6) Connect stay to the bracket.

Tightening torque:
18±5 N·m (1.84±0.51 kg-m, 13.3±3.7 ft-lb)

7) Install the exhaust cover.