2. Basic Diagnostics Procedures

The most important purpose of diagnostics is to determine which part is malfunctioning quickly, to save time and labor.

A: IDENTIFICATION OF TROUBLE SYMPTOM

Determine what the problem is based on the symptom.

B: PROBABLE CAUSE OF TROUBLE

Look at the wiring diagram and check the system's circuit. Then check the switch, relay, fuse, ground, etc.

C: LOCATION AND REPAIR OF TROUBLE

1) Using the diagnostics narrow down the causes.
2) If necessary, use a voltmeter, ohmmeter, etc.
3) Before replacing certain component parts (switch, relay, etc.), check the power supply, ground, for open wiring harness, poor connectors, etc. If no problems are encountered, check the component parts.

D: CONFIRMATION OF SYSTEM OPERATION

After repairing, ensure that the system operates properly.

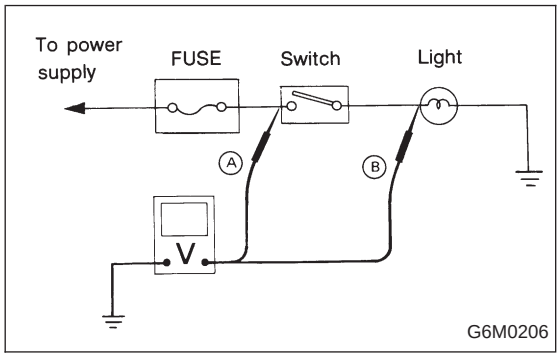

E: INSPECTION

1. VOLTAGE MEASUREMENT

1) Using a voltmeter, connect the negative lead to a good ground point or negative battery terminal and the positive lead to the connector or component terminal.
2) Contact the positive probe of the voltmeter on connector (A).
The voltmeter will indicate a voltage.
3) Shift the positive probe to connector (B). The voltmeter will indicate no voltage.
With test set-up held as it is, turn switch ON. The voltmeter will indicate a voltage and, at the same time, the light will come on.
4) The circuit is in good order. If a problem such as a lamp failing to light occurs, use the procedures outlined above to track down the malfunction.

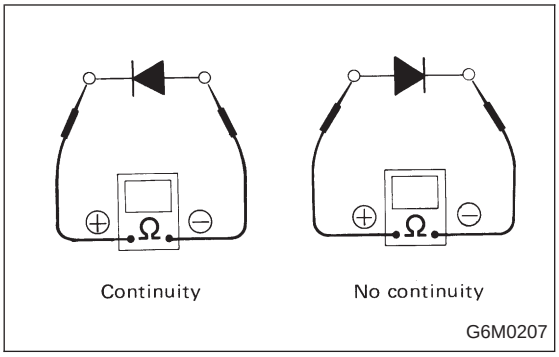

2. CIRCUIT CONTINUITY CHECKS

1) Disconnect the battery terminal or connector so there is no voltage between the check points.
Contact the two leads of an ohmmeter to each of the check points.
If the circuit has diodes, reverse the two leads and check again.

2) Use an ohmmeter to check for diode continuity.
When contacting the negative lead to the diode positive side and the positive lead to the negative side, there should be continuity.
When contacting the two leads in reverse, there should be no continuity.

3) Symbol “o—o” indicates that continuity exists between two points or terminals. For example, when a switch position is “3”, continuity exists among terminals 1, 3 and 6, as shown in table below.

Terminal / Switch Position	1	2	3	4	5	6
OFF						
1	○				○	○
2	○			○		○
3	○		○			○
4	○	○				○

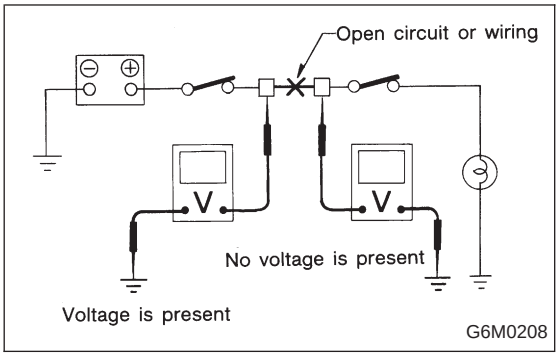

3. HOW TO DETERMINE AN OPEN CIRCUIT

1) Voltmeter method

An open circuit is determined by measuring the voltage between respective connectors and ground using a voltmeter, starting with the connector closest to the power supply. The power supply must be turned ON so that current flows in the circuit. If voltage is not present between a particular connector and ground, the circuit between that connector and the previous connector is open.

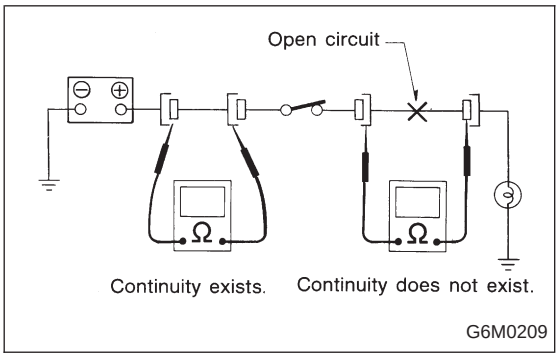

2) Ohmmeter method

Disconnect all connectors affected, and check continuity in the wiring between adjacent connectors. When the ohmmeter indicates “infinite”, the wiring is open.

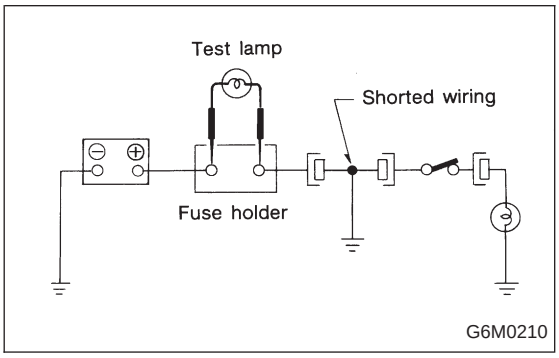

4. HOW TO DETERMINE A SHORT-CIRCUIT

1) Test lamp method

Connect a test lamp (rated at approximately 3 watts) in place of the blown fuse and allow current to flow through the circuit. Disconnect one connector at a time from the circuit, starting with the one located farthest from the power supply. If the test lamp goes out when a connector is disconnected, the wiring between that connection and the next connector (farther from the power supply) is shorted.

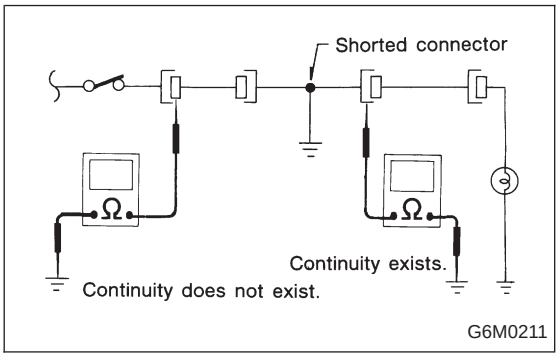

2) Ohmmeter method

Disconnect all affected connectors, and check continuity between each connector and ground. When ohmmeter indicates continuity between a particular connector and ground, that connector is shorted.