7. Electrical Unit Location

Electrical unit	Refer to;
A.B.S. control module	4-4a [T300]
A.B.S. G sensor (MT)	4-4a [T300]
A/C compressor relay	⑦
A/C fuse	⑪
A/C main fan relay 1	⑩
A/C main fan relay 2	⑧
A/C pressure switch	②
A/C sub fan relay 2	⑨
ATF temperature sensor	2-7 [T2B1]
Blower motor resistor	㉖
Blower relay	⑬
Camshaft position sensor	2-7 [T2A2]
Check connector	㉕
Clutch switch (MT)	6-2 [T300]
Crankshaft position sensor	2-7 [T2A2]
Cruise control module	6-2 [T300]
Cruise control pump	6-2 [T300]
Data link connector (for OBD-II G.S.T.)	2-7 [T2A1]
Data link connector (for S.S.M.)	2-7 [T2A1]
Diagnosis connector	4-4a [T300]
Diagnosis terminal (Ground)	4-4a [T300]
Door lock timer	㉗
Engine control module	2-7 [T2A1]
Engine coolant temperature sensor	2-7 [T2A2]
Engine hood switch (Security)	6-2 [K6A0]
Evaporator thermoswitch	㉙
F/B	⑮
FRESH/RECIRC actuator	㉘
Fuel pump relay	2-7 [T2A3]
Fuel gauge module	㉛
Fuel gauge sub module (AWD)	㉜
FWD switch (AT)	①
Headlight alarm relay (Security)	6-2 [K6A0]
Headlight relay LH	⑤
Headlight relay RH	⑥
Horn relay	⑭

Electrical unit	Refer to;
Hydraulic unit (A.B.S.)	4-4a [T300]
Ignition coil	2-7 [T2A3]
Ignitor	2-7 [T2A3]
Idle air control solenoid valve	2-7 [T2A3]
Illumination control module	㉑
Inhibitor switch	6-2 [T300]
Knock sensor	2-7 [T2A2]
Main fan relay	⑲
Main relay	2-7 [T2A3]
Mass air flow sensor	2-7 [T2A2]
Mode actuator	⑫
M/B	④
Oil pressure switch	③
Oxygen sensor	2-7 [T2A2]
Pedal stroke sensor (T.C.S.)	4-4b [T300]
Power window and sunroof relay	㉔
Power window circuit breaker	㉓
Purge control solenoid valve	2-7 [T2A3]
Rear defogger relay	⑰
Seat belt timer	⑳
Security control module	6-2 [K6A0]
Shift lock control module	㉒
Starter interrupt relay (Security)	6-2 [K6A0]
Stop & brake switch (With cruise control)	6-2 [T300]
Sunroof control module	㉚
Tail and illumination relay	⑱
T.C.S. control module	4-4b [T300]
T.C.S. motor relay	4-4b [T300]
T.C.S. valve relay	4-4b [T300]
Throttle position sensor	2-7 [T2A2]
Test mode connector	2-7 [T2A1]
Transmission control module	2-7 [T2B1]
Turn & hazard module	⑯
Vehicle speed sensor 1	2-7 [T2B1]
Vehicle speed sensor 2	2-7 [T2B1]

1. ENGINE ROOM

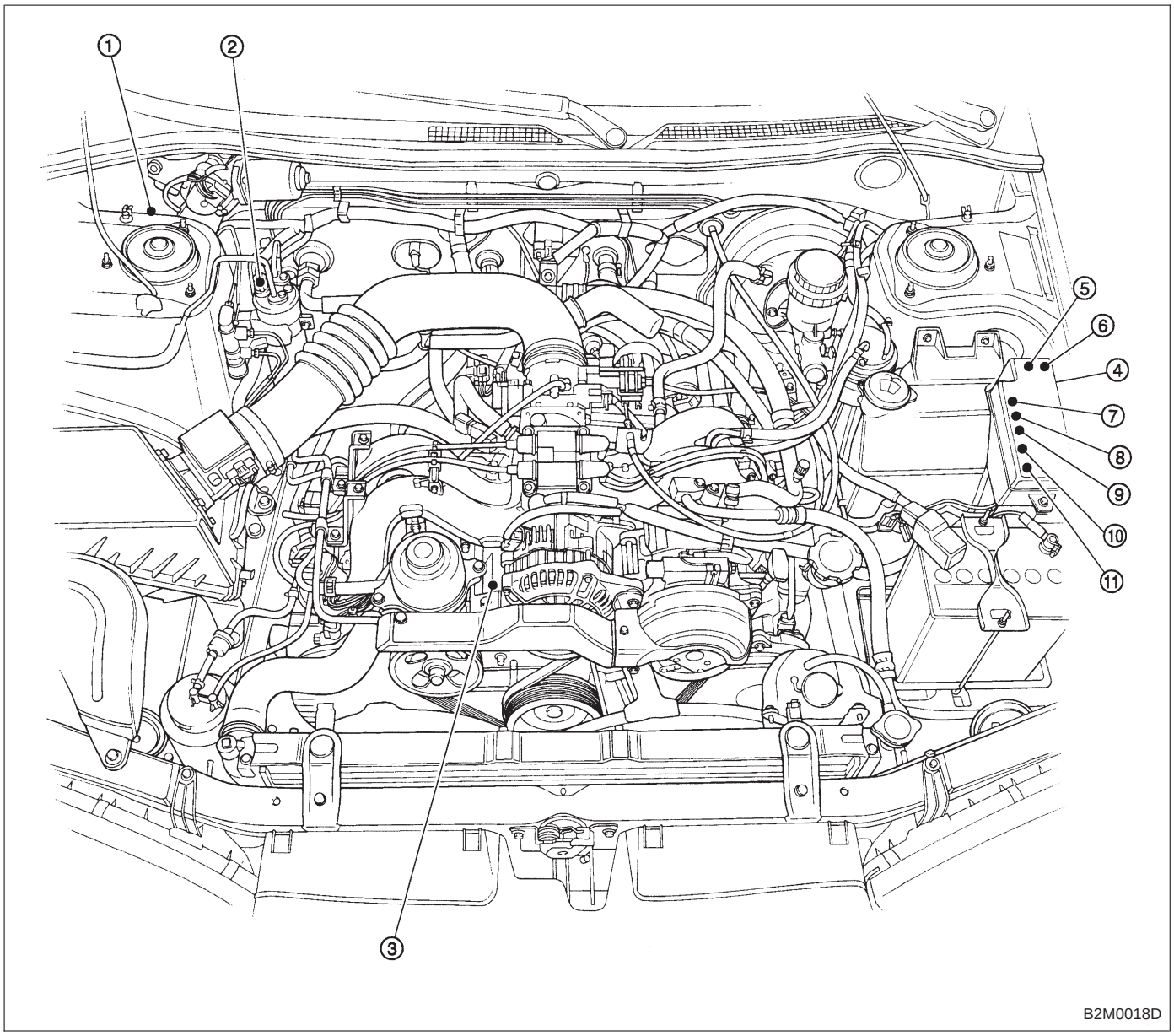

1. FWD switch (AT)
2. A/C pressure switch
3. Oil pressure switch
4. M/B
5. Headlight relay LH
6. Headlight relay RH
7. A/C compressor relay
8. A/C main fan relay 2
9. A/C sub fan relay 2
10. A/C main fan relay 1
11. A/C fuse

2. INSTRUMENT PANEL

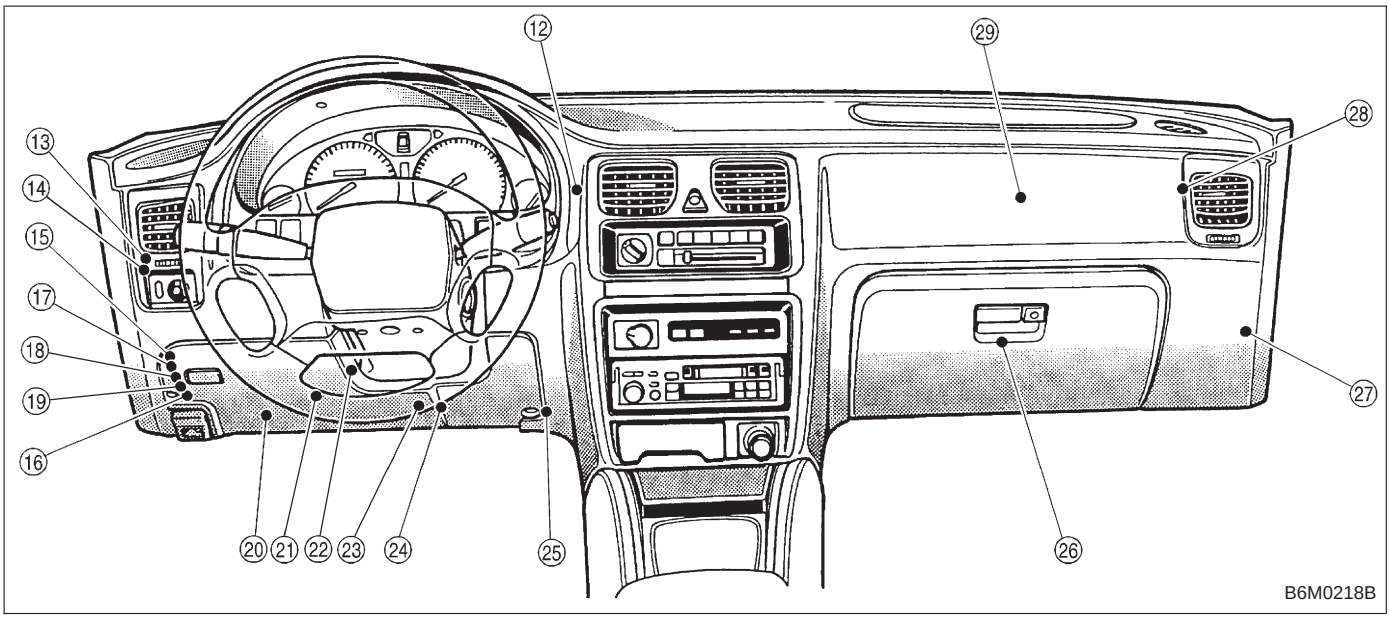

⑫ Mode actuator
⑬ Blower relay
⑭ Horn relay
⑮ F/B
⑯ Turn & hazard module
⑰ Rear defogger relay
⑱ Tail & illumination relay
⑲ Main fan relay
⑳ Seat belt timer
㉑ Illumination control module
㉒ Shift lock control module
㉓ Power window circuit breaker
㉔ Power window & sunroof relay
㉕ Check connector
㉖ Blower motor resistor
㉗ Door lock timer
㉘ FRESH/RECIRC actuator
㉙ Evaporator thermoswitch

3. COMPARTMENT

● SEDAN

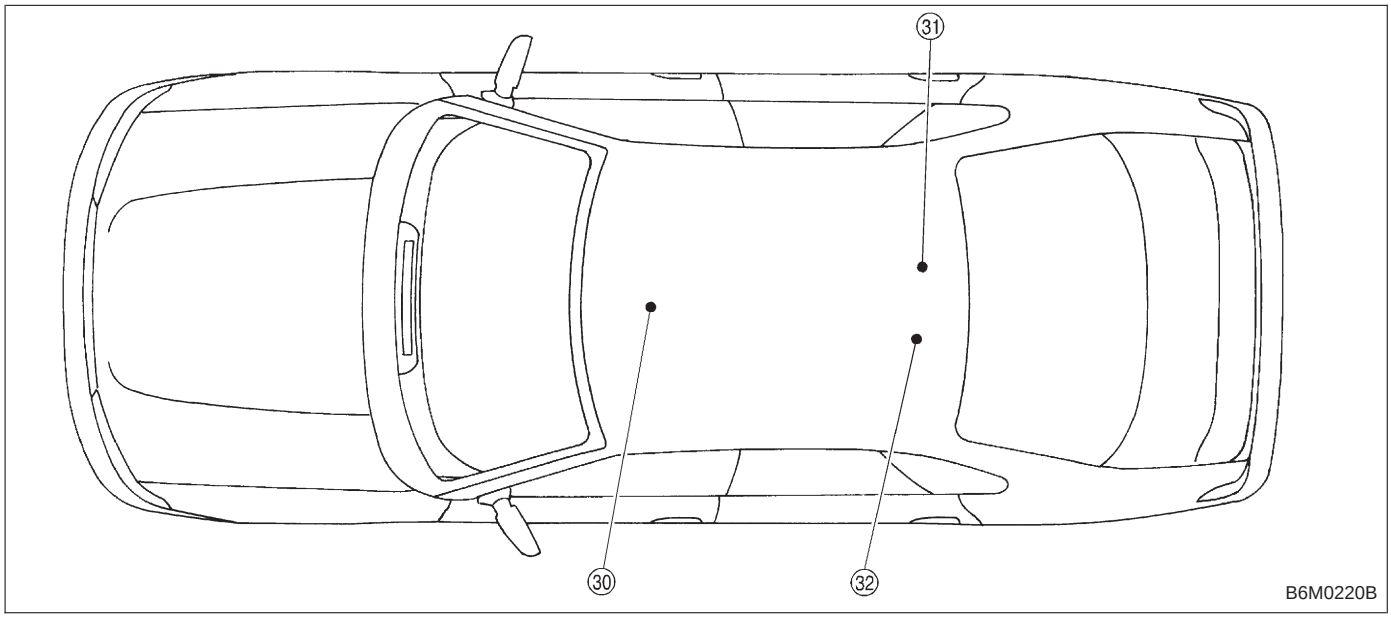

● WAGON

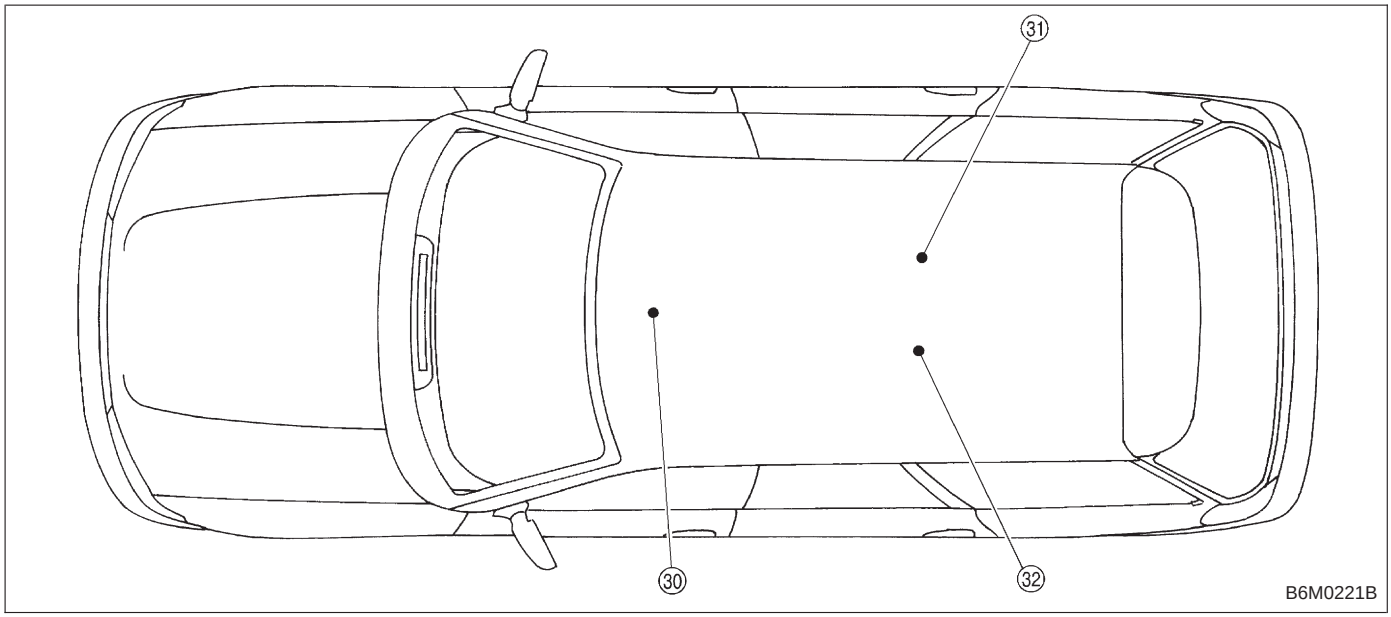

㉚ Sunroof control module
㉛ Fuel gauge module
㉜ Fuel gauge sub module (AWD)

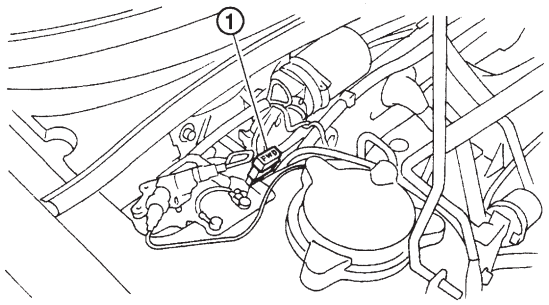

B6M0222A

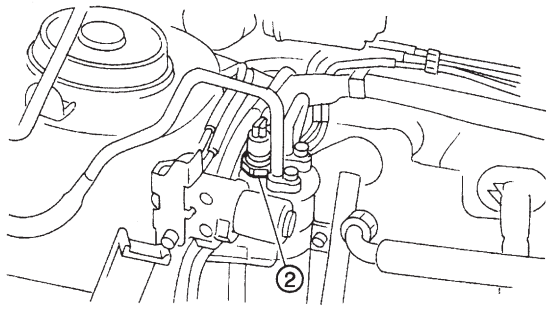

B6M0223A

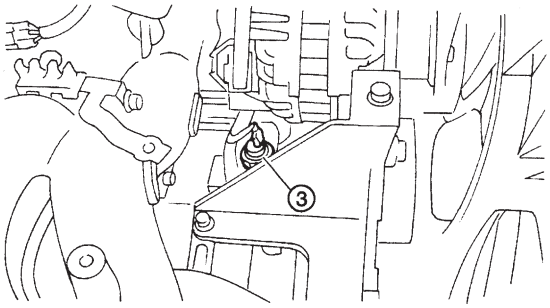

B6M0224A

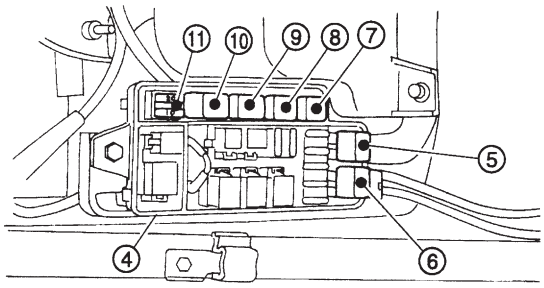

B6M0225A

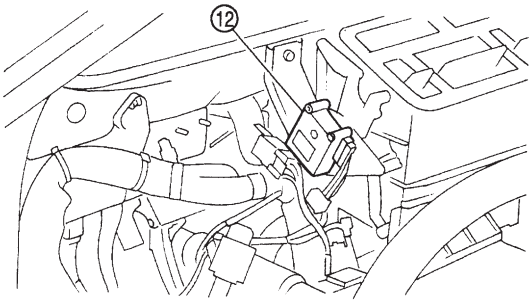

B6M0226A

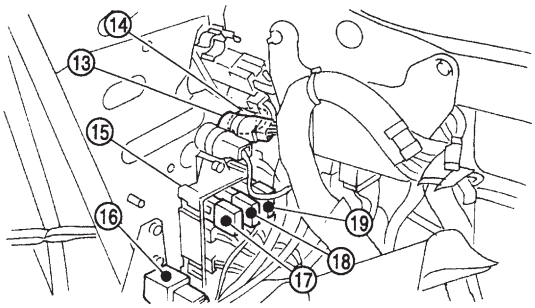

B6M0227A

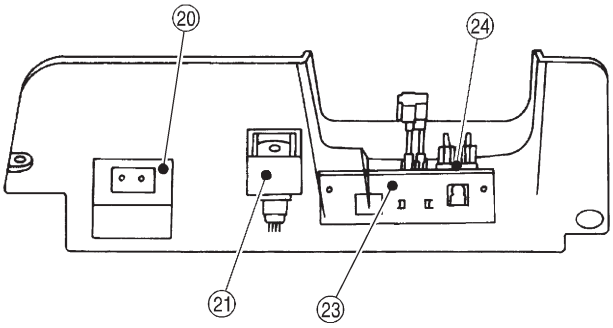

B6M0494A

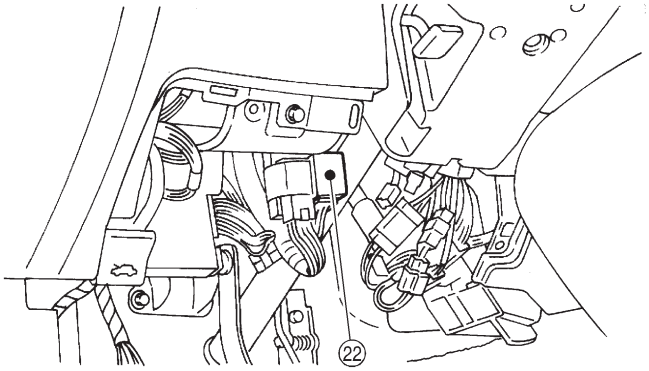

B6M0493A

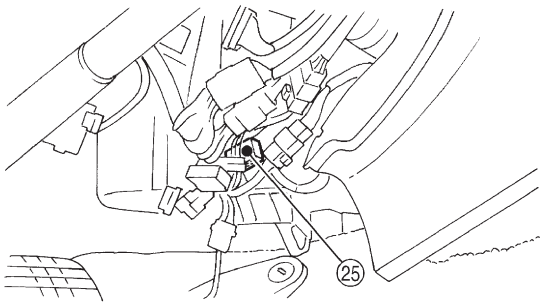

B6M0230B

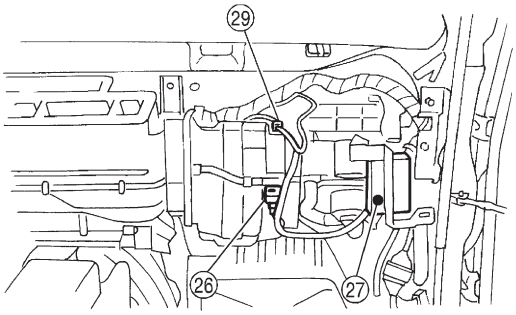

B6M0231B

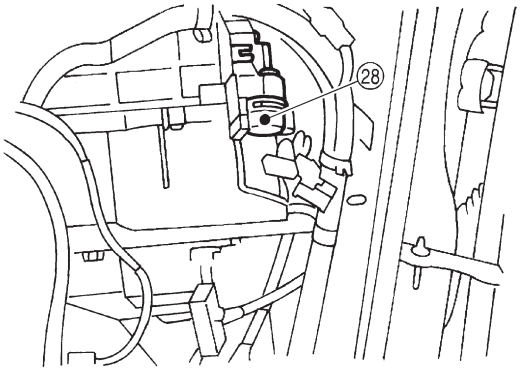

B6M0495A

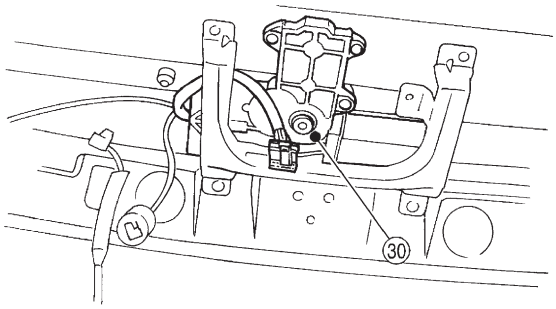

B6M0233B

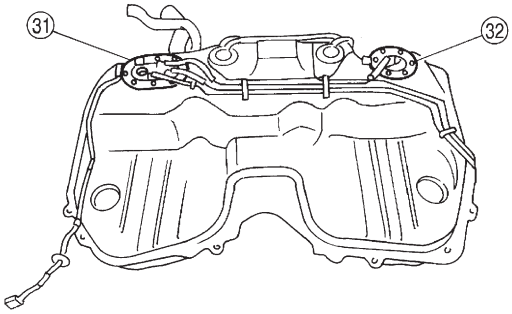

B6M0235B