3. Front Bumper (Except outback with step roof)

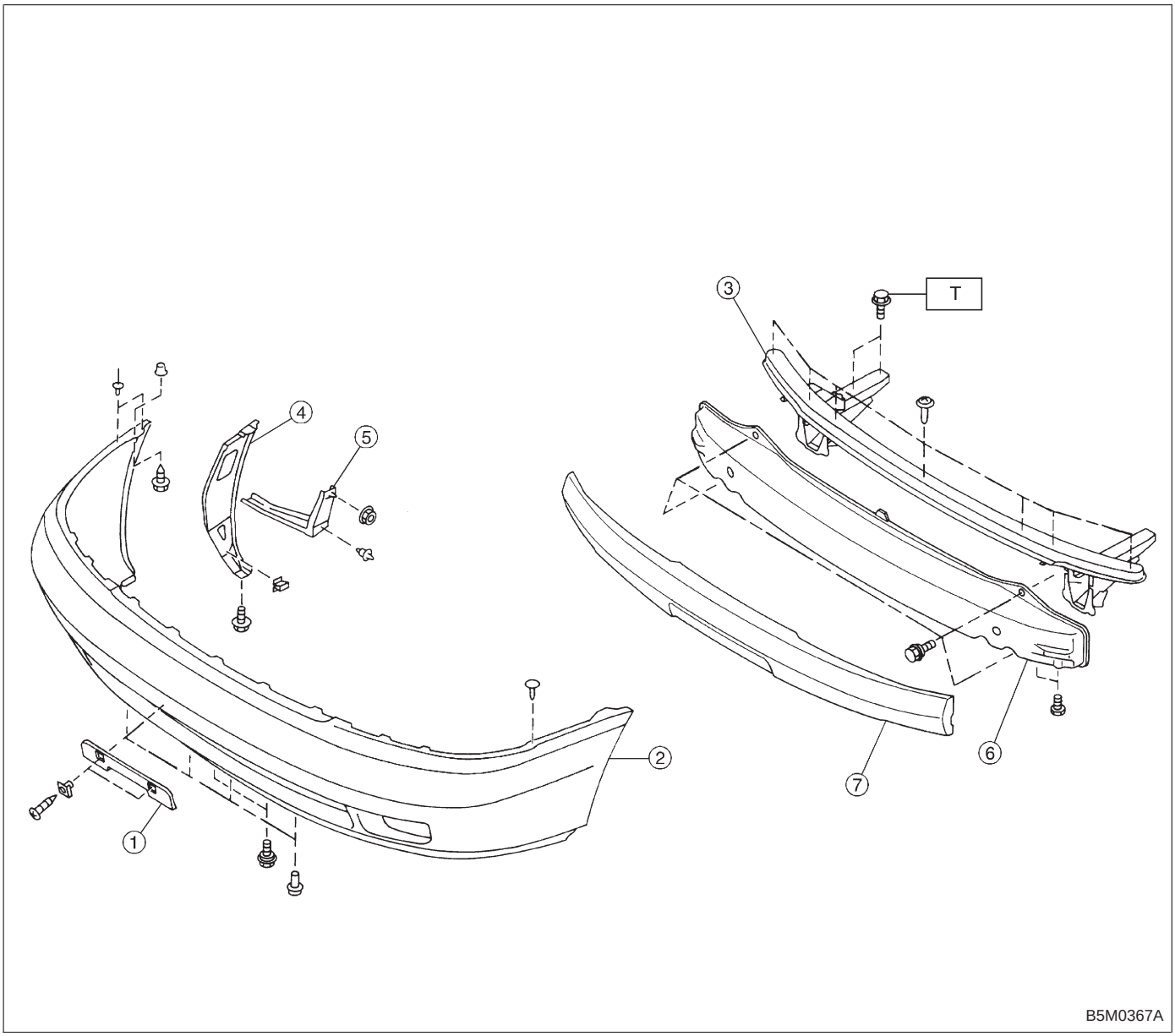

① Licence plate bracket
② Bumper face
③ Front bumper beam
④ Bracket
⑤ Stay
⑥ Back beam (Front)
⑦ E-A foam (Front)

Tightening torque: N·m (kg-m, ft-lb)
T: 93±25 (9.5±2.5, 69±18)