9. Front Bumper (Outback with step roof)

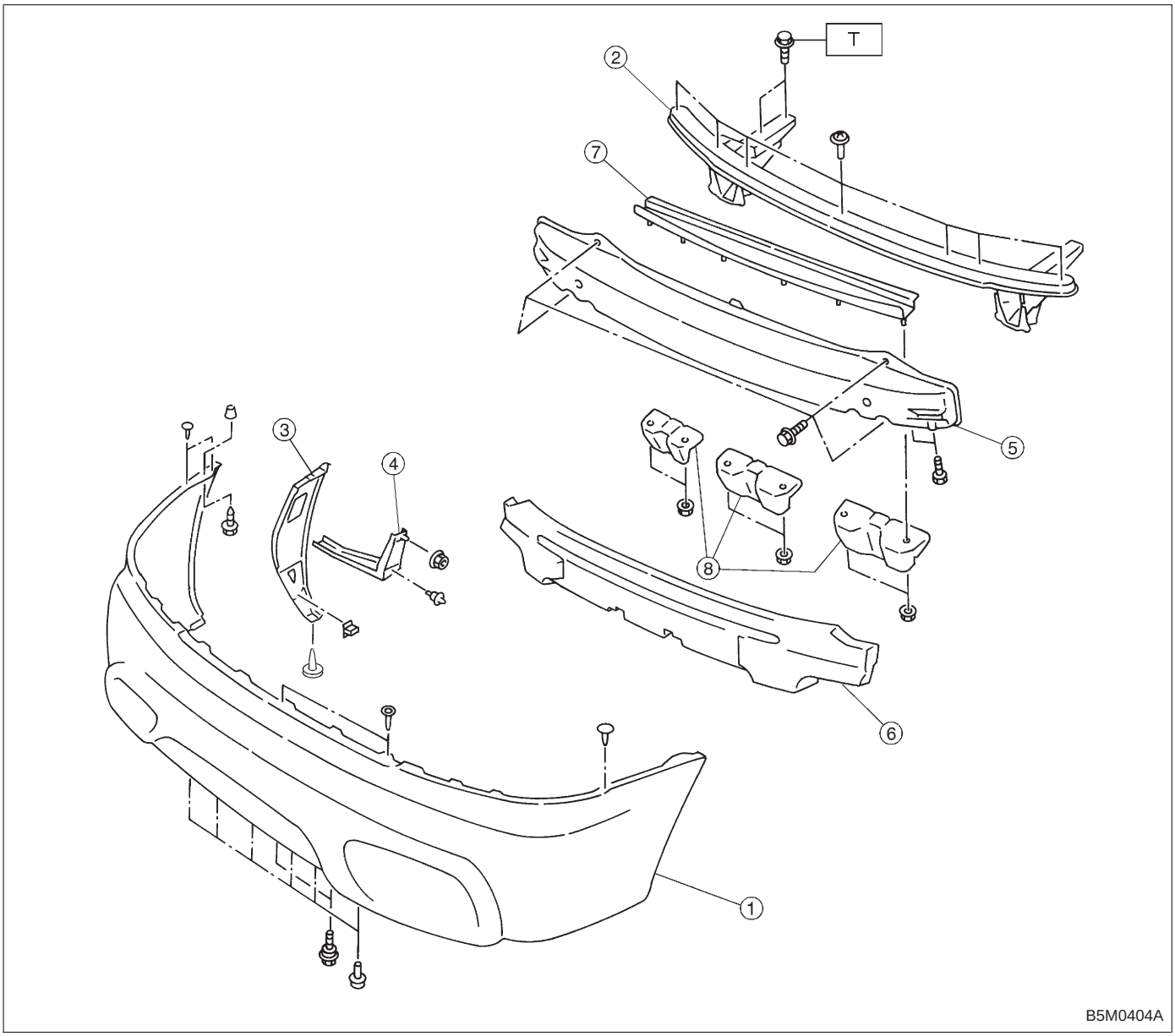

① Bumper face
② Front bumper beam
③ Bracket
④ Stay
⑤ Back beam (Front)
⑥ E-A foam (Front)
⑦ Holder
⑧ Back beam bracket

Tightening torque: N·m (kg-m, ft-lb)
T: 93±25 (9.5±2.5, 69±18)