8. Guard Pipe

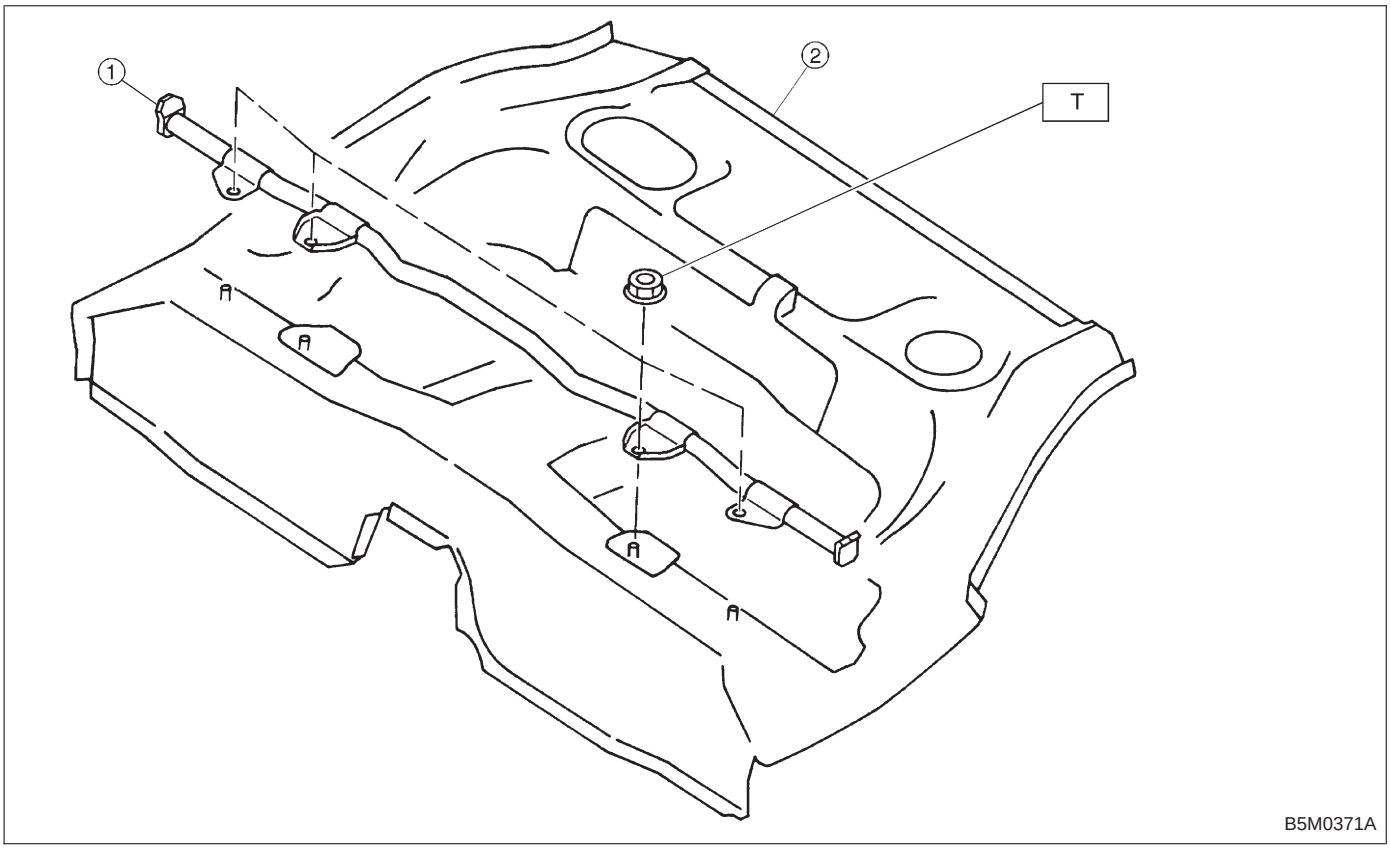

① Guard pipe
② Rear floor panel

Tightening torque: N·m (kg-m, ft-lb)
T: 32±10 (3.3±1.0, 23.9±7)