4. Rear Bumper (Sedan)

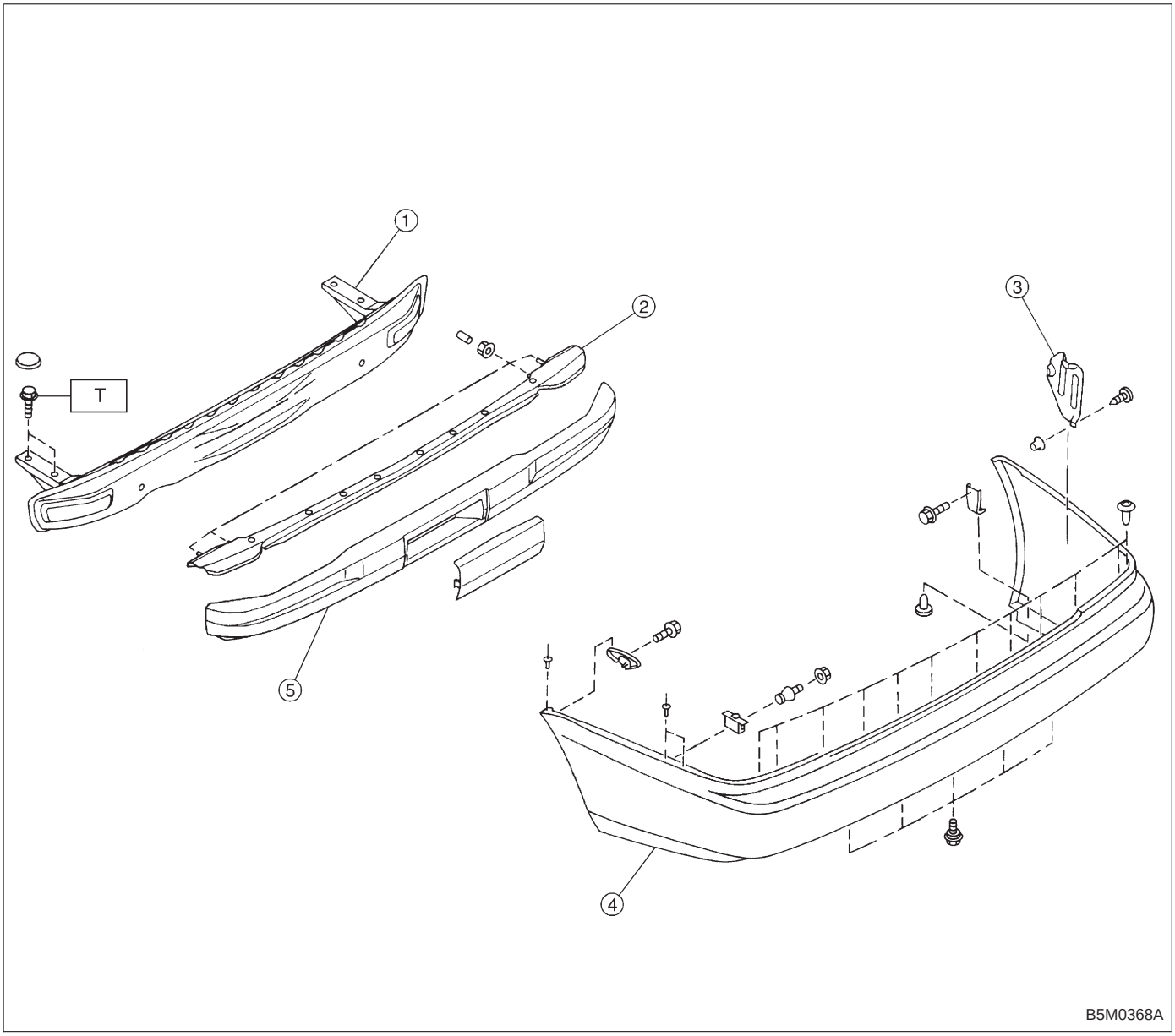

① Bumper beam (LWR)
② Bumper beam (UPR)
③ Bracket (Side)
④ Bumper surface
⑤ E-A foam (Rear)

Tightening torque: N·m (kg-m, ft-lb)
T: 93±25 (9.5±2.5, 69±18)