6. Sunroof

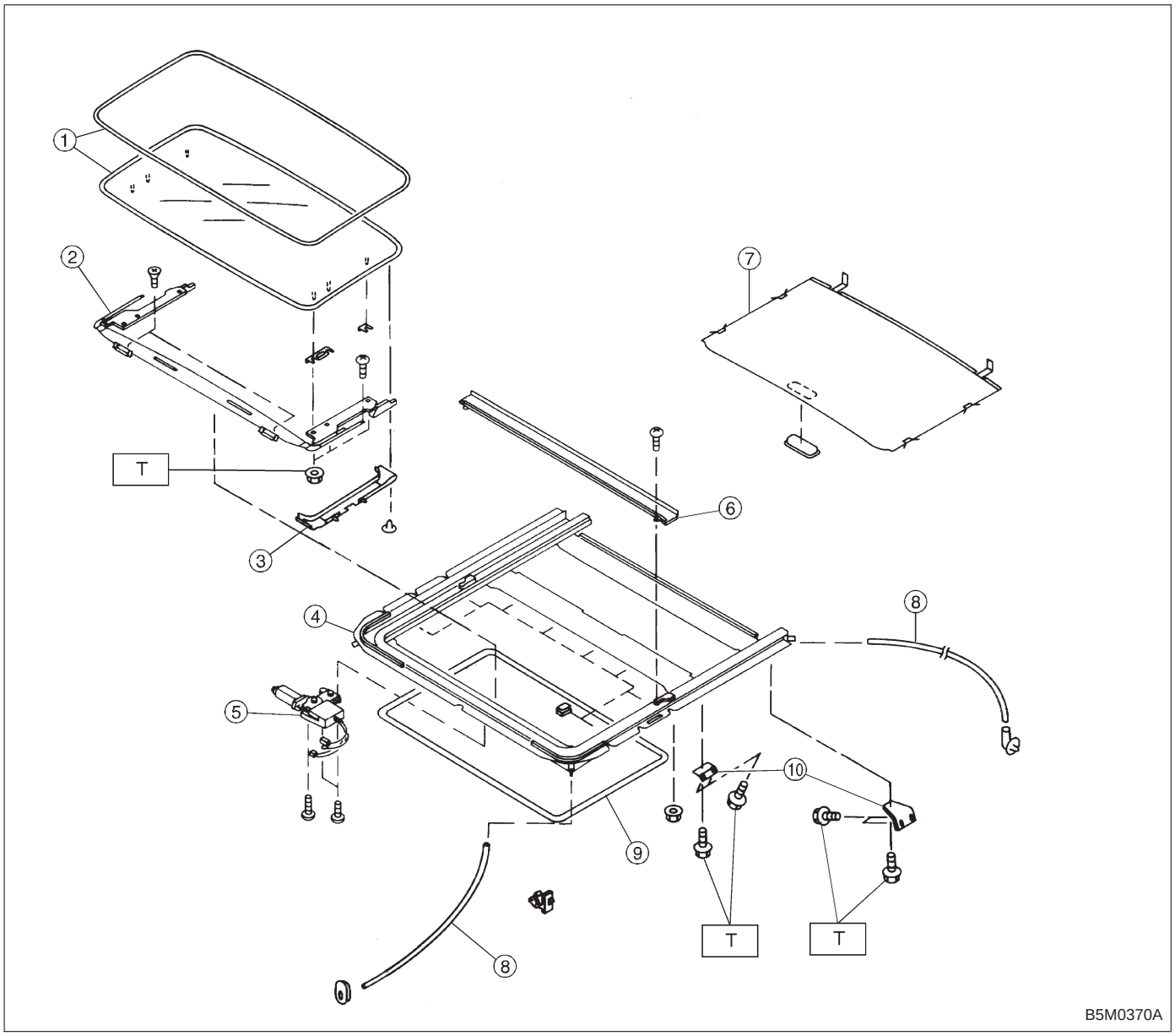

① Glass lid ASSY
② Deflector and guide rail ASSY
③ Guide rail cover
④ Frame ASSY
⑤ Motor ASSY
⑥ Drain ASSY
⑦ Sun shade
⑧ Drain tube
⑨ Garnish
⑩ Set bracket

Tightening torque: N·m (kg-m, ft-lb)
T: 7.4±2.0 (0.75±0.2, 5.4±1.4)