2. Trunk Lid

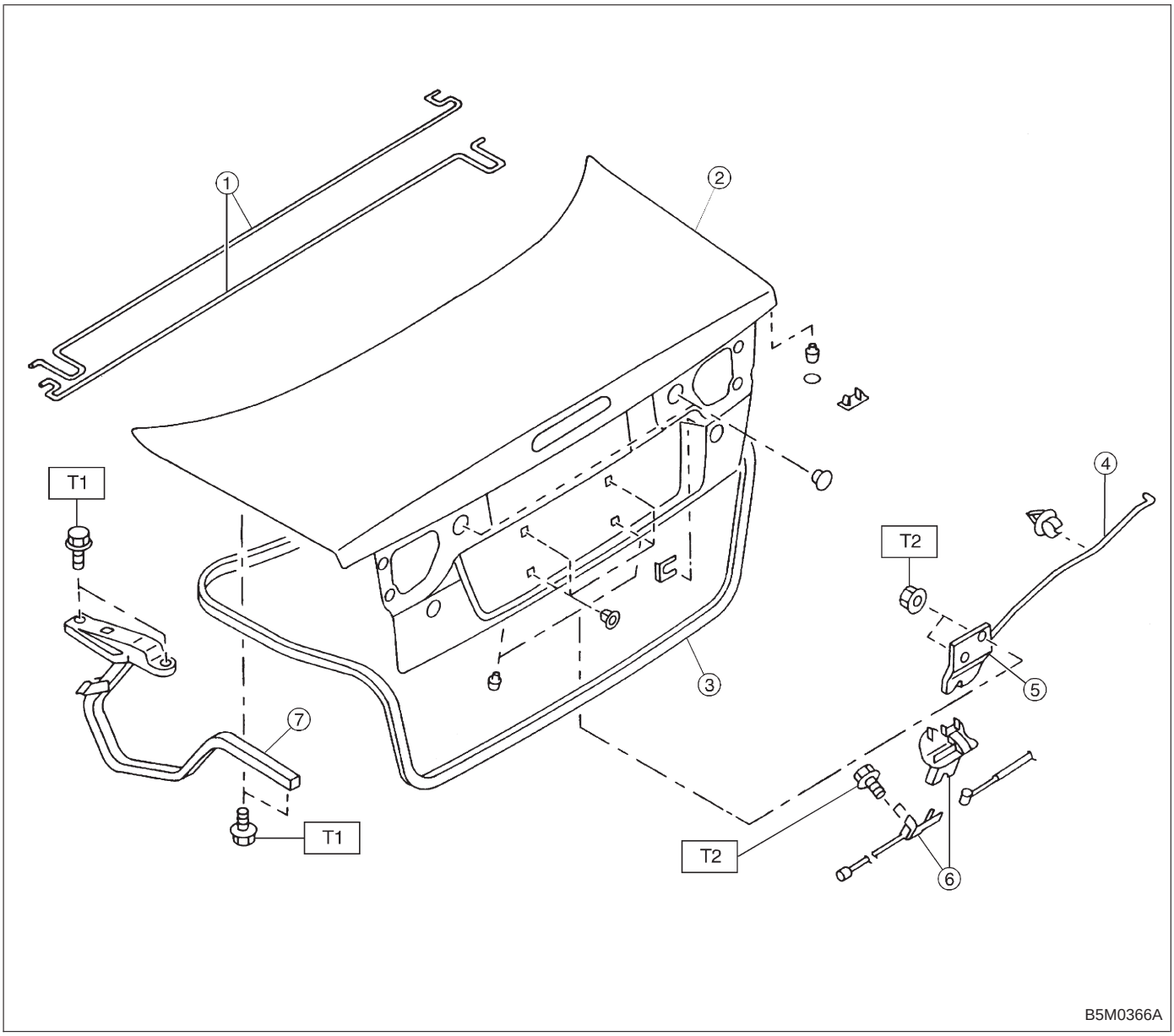

① Torsion bar
② Trunk lid
③ Weatherstrip
④ Rod
⑤ Trunk lid lock ASSY
⑥ Striker
⑦ Hinge ASSY

Tightening torque: N·m (kg-m, ft-lb)
T1: 14±4 (1.4±0.4, 10.1±2.9)
T2: 18±5 (1.8±0.5, 13.0±3.6)