1. Supplemental Restraint System “Airbag”

Airbag system wiring harness is routed on and along body panels.

CAUTION:

- **All Airbag system wiring harness and connectors are colored yellow. Do not use electrical test equipment on these circuits.**
- **Be careful not to damage Airbag system wiring harness when repairing the body panel.**

2. Body Datum Points

Various master repair locations are established as datum points used during body repairs. In addition, guide holes, locators and indents are provided to facilitate panel replacement and achieve alignment accuracy.

NOTE:
Left and right datum points are all symmetrical to each other.

1. ENGINE COMPARTMENT AND ROOM

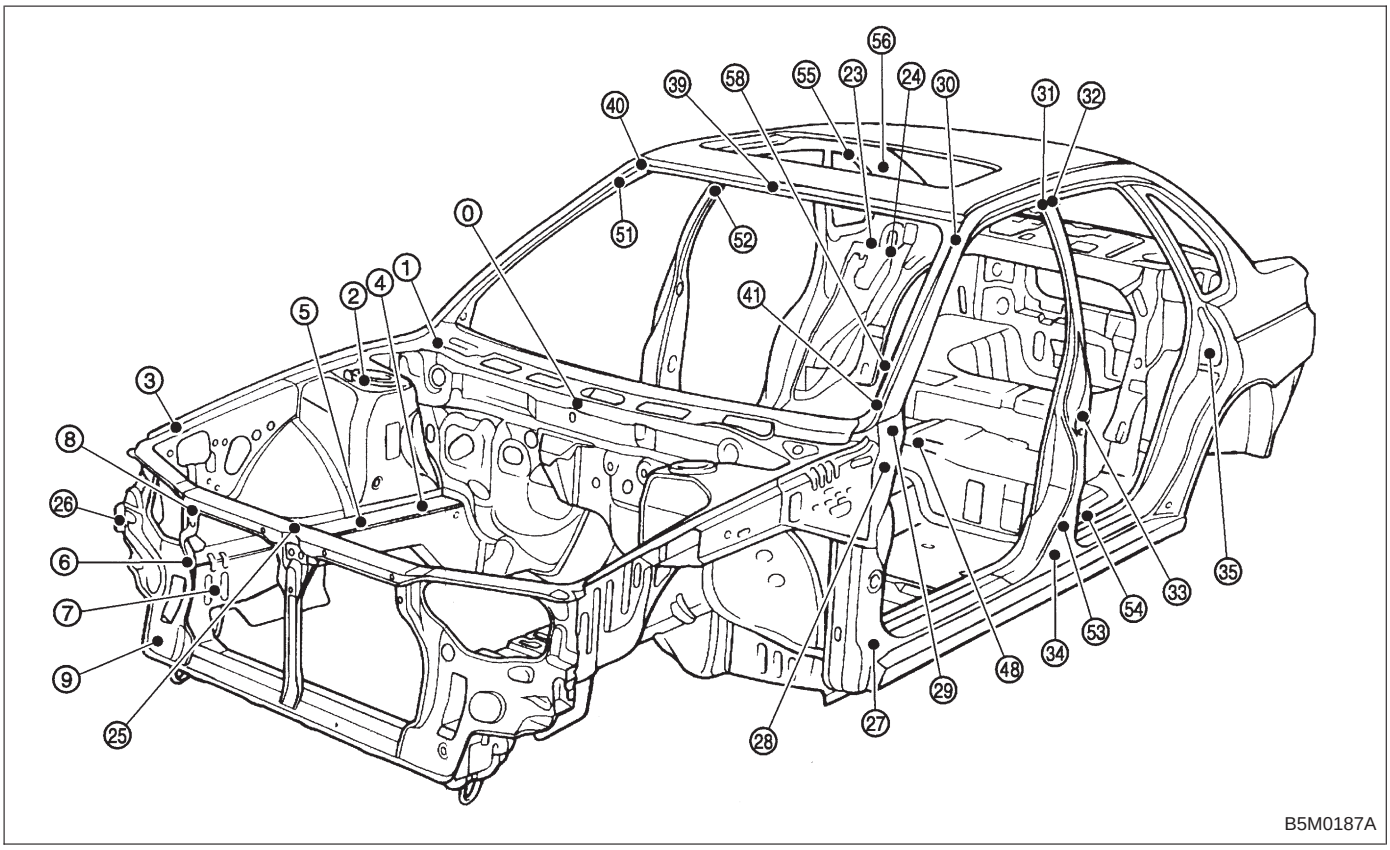

⓪ Cowl panel weather attaching hole 6 mm (0.24 in) dia.
① Hood hinge front attaching hole M8
② Strut mount attaching hole (Front center) 9.5 mm (0.374 in) dia.
③ Front fender attaching hole (Tip) M6
④ Rear upper surface of front side frame 12 mm (0.47 in) dia.
⑤ Middle upper surface of front side frame 20 mm (0.79 in) dia.
⑥ Front side frame front upper surface 14 x 16 mm (0.55 x 0.63 in) dia. oblong hole
⑦ Side frame of front side frame 12 mm (0.47 in) dia.
⑧ Headlight attaching hole at radiator side panel 6.2 x 9 mm (0.244 x 0.35 in) dia.
⑨ Radiator panel side (LWR) gauge hole 23 mm (0.91 in) dia.
㉓ Rear strut mount attaching hole (Side) 10 mm (0.39 in) dia.
㉔ Rear strut mount attaching hole (Center) 12 mm (0.47 in) dia.
㉕ Radiator panel (UPR) middle hole 6 mm (0.24 in) dia.
㉖ Front fender attaching hole at radiator panel side M6
㉗ Front fender attaching hole at front pillar lower portion M6
㉘ Hinge middle hole at front pillar center 10 mm (0.39 in) dia.
㉙ Front fender attaching hole at front pillar center portion M6
㉚ Retainer attaching square hole at front pillar 7 x 7 mm (0.28 x 0.28 in)
㉛ Retainer attaching hole at center pillar (Front) 3.5 mm (0.138 in) dia.
㉜ Retainer attaching hole at center pillar (Rear) 3.5 mm (0.138 in) dia.
㉝ Lower side of rear door hinge M8
㉞ Center pillar (LWR) gauge hole 27 mm (1.06 in) dia.
㉟ Rear quarter outer corner patch attaching hole 5.2 mm (0.205 in) dia.
㊴ Front rail center notch
㊵ Front glass upper locating notch RH: 6.5 mm (0.256 in) dia., LH: 6.5 x 10 mm (0.256 x 0.39 in) dia. oblong hole
㊶ Stud bolt lower locating notch
㊽ Front center of rear floor pan 8 mm (0.31 in) dia.
㊺ Front upper pillar (Inner) 7 mm (0.28 in) dia.
㊷ Front seat belt adjust plate attaching hole 12 mm (0.47 in) dia.
㊸ Rear door hinge middle hole 10 mm (0.39 in) dia.
㊹ Rear floor, near door 8 mm (0.31 in) dia.
㊺ Trim upper attaching hole at 6 light 8 mm (0.31 in) dia.
㊻ Trim lower attaching hole at 6 light 8 mm (0.31 in) dia.
㊽ Rear floor, near floor strut 15 x 20 mm (0.59 x 0.79 in) dia. oblong hole

2. LUGGAGE COMPARTMENT AND ROOM (SEDAN)

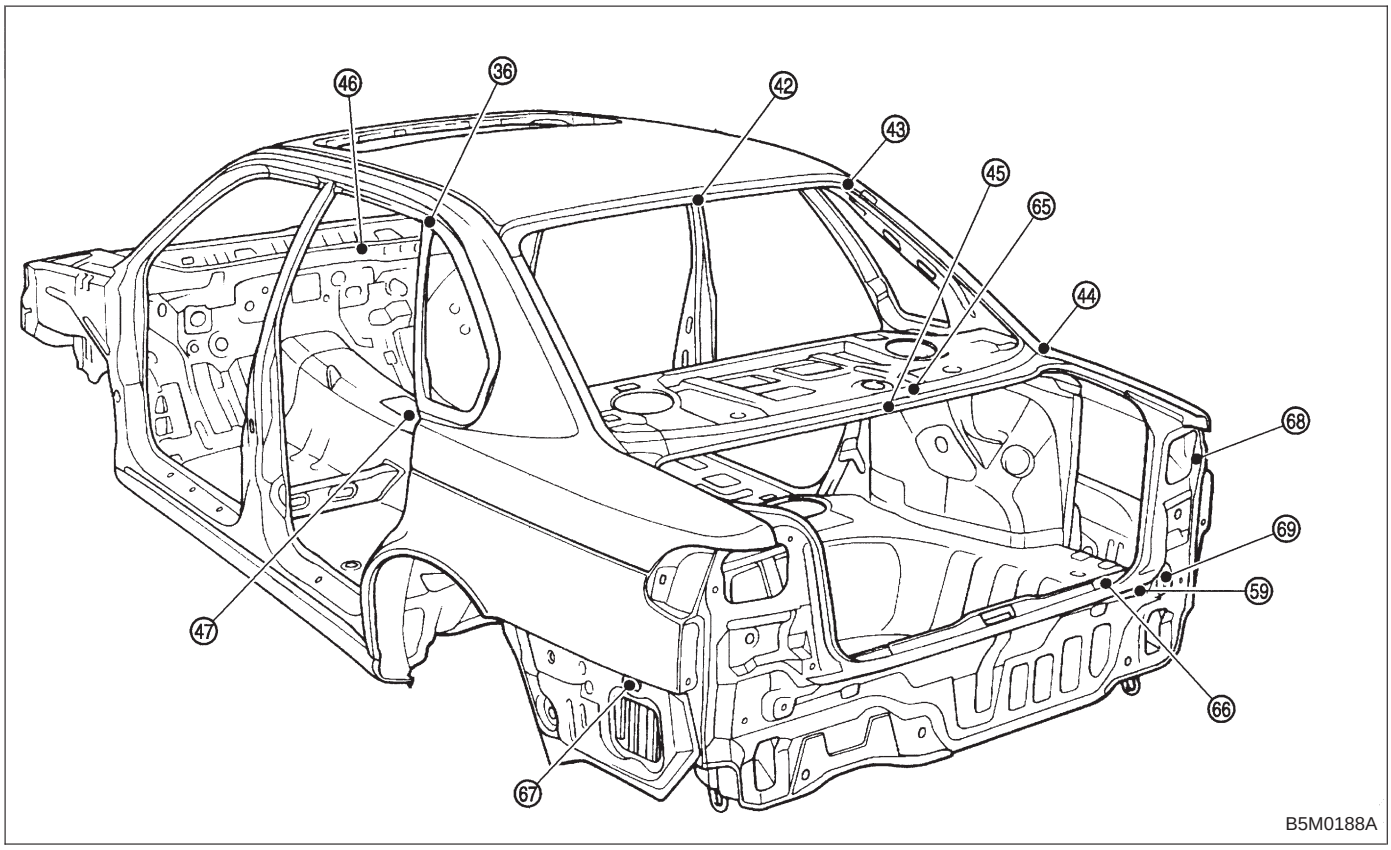

36 6 light upper retainer attaching square hole 7 x 7 mm (0.28 x 0.28 in)
42 Rear rail center notch
43 Rear glass upper locating hole RH: 6.5 mm (0.256 in) dia., LH: 6.5 x 10 mm (0.256 x 0.39 in) dia. oblong hole
44 Rear glass molding attaching square hole 8 x 8 mm (0.31 x 0.31 in)
45 Rear panel drain locater concave part
46 Front panel gauge hole 10 mm (0.39 in) dia.
47 Tunnel center M8
59 Rear bumper attaching hole 45 mm (1.77 in) dia.
65 Rear wiper attaching hole M6
66 Trim attaching hole at rear skirt (UPR) 7 mm (0.28 in) dia.
67 Rear bumper side attaching hole 6 mm (0.24 in) dia.
68 Rear combination light mounting hole 8 mm (0.31 in) dia.
69 Rear bumper beam attaching hole RH: 8 mm (0.31 in) dia., LH: 8 x 12 mm (0.31 x 0.47 in) dia. oblong hole

3. LUGGAGE COMPARTMENT AND ROOM (WAGON)

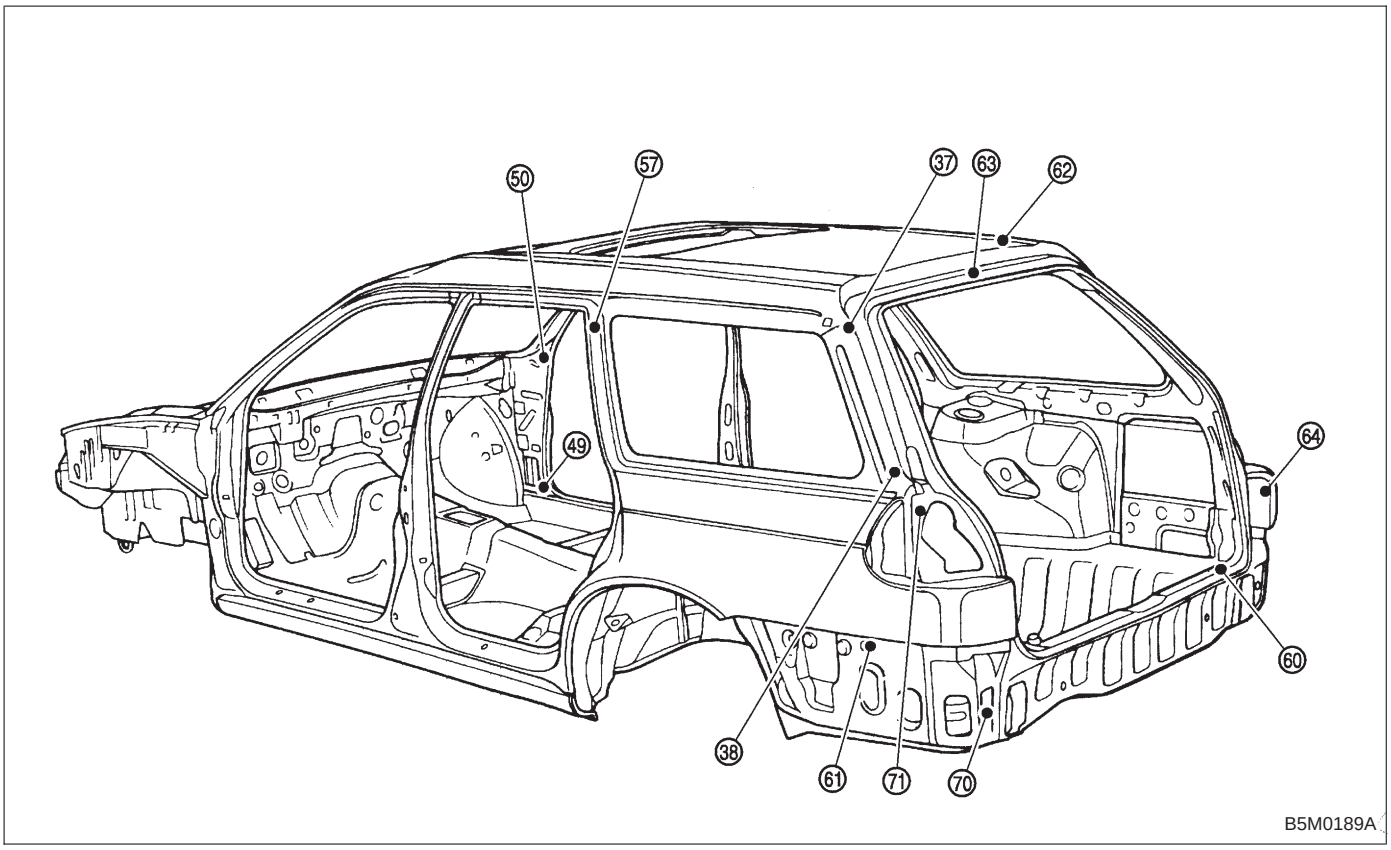

㊲ D pillar cover attaching hole 12 x 8 mm (0.47 x 0.31 in) dia.
㊳ Shoulder mole attaching hole 8 mm (0.31 in) dia.
㊾ Front pillar (LWR) gauge hole 10 mm (0.39 in) dia. (On both Sedan and Wagon)
㊿ Front pillar (UPR) gauge hole 16 mm (0.63 in) dia. (On both Sedan and Wagon)
(57) Retainer attaching square hole at C pillar (UPR) 7 x 7 mm (0.28 x 0.28 in)
(60) Trim attaching hole at rear skirt (UPR) 15 mm (0.59 in) dia.
(61) Rear bumper side attaching hole 6 mm (0.24 in) dia.
(62) Rear seat belt bolt hole 13 mm (0.51 in) dia.
(63) Rear rail locator concave part
(64) Buffer attaching hole (UPR) M6
(70) Rear quarter end (LWR) gauge hole 20 mm (0.79 in) dia.
(71) Rear combination light mounting hole 7 mm (0.28 in) dia.

4. UNDERBODY

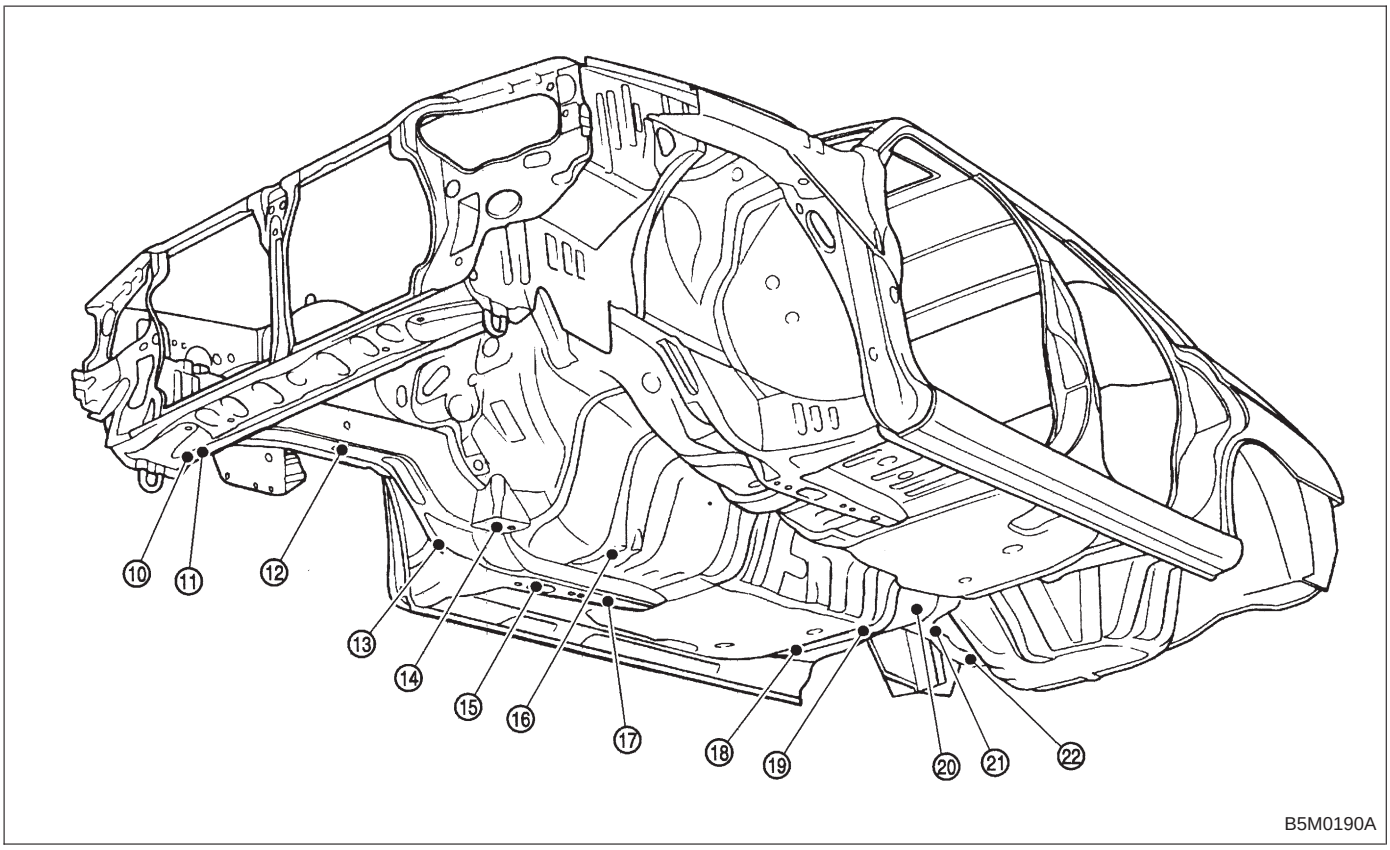

⑩ Radiator panel (LWR) frame gauge hole 10 mm (0.39 in) dia.
⑪ Front side frame front lower surface 20 mm (0.79 in) dia.
⑫ Front side frame center lower surface 20 mm (0.79 in) dia.
⑬ Front suspension attaching hole M14
⑭ Suspension attaching bracket M14
⑮ Front side frame rear lower center surface 20 mm (0.79 in) dia.
⑯ Transmission mount attaching hole M10
⑰ Front side frame rear lower surface 15 mm (0.59 in) dia.
⑱ Rear frame front M12
⑲ Rear frame front hole 25 mm (0.98 in) dia.
⑳ Rear crossmember attaching hole M12
㉑ Rear frame center hole 7 mm (0.28 in) dia.
㉒ Rear frame rear concave part 15 mm (0.59 in) dia.

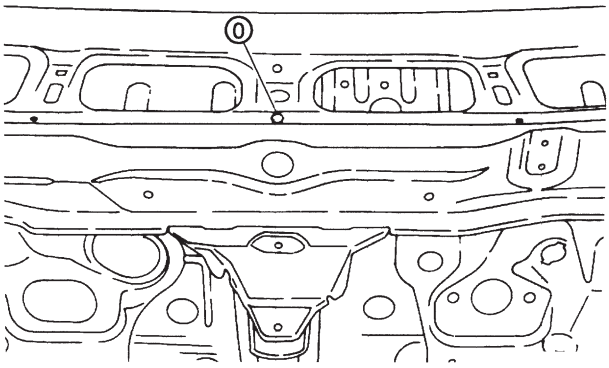

B5M0191A

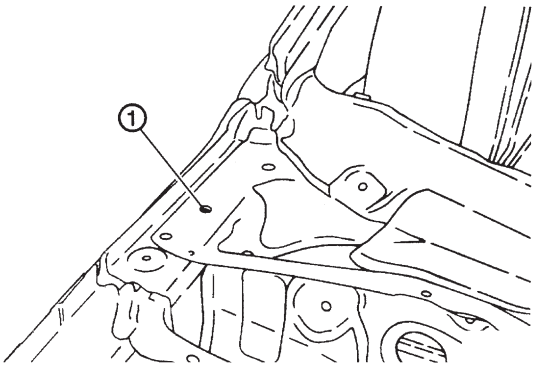

B5M0192A

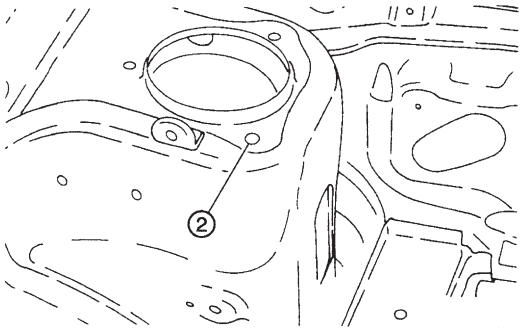

B5M0193A

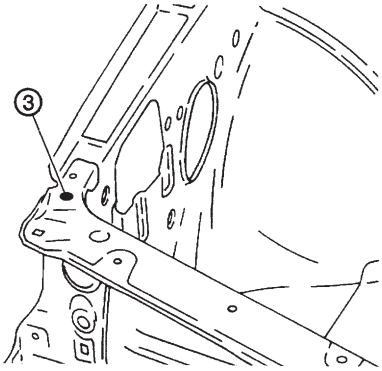

B5M0194A

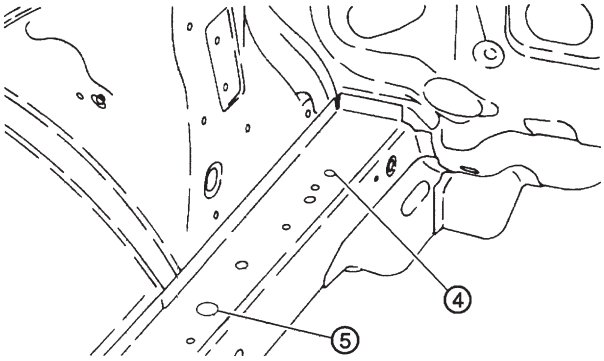

B5M0195A

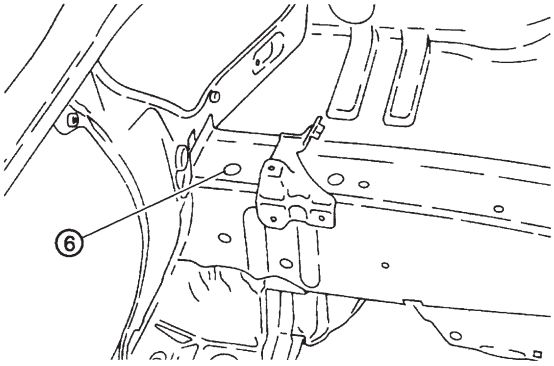

B5M0196A

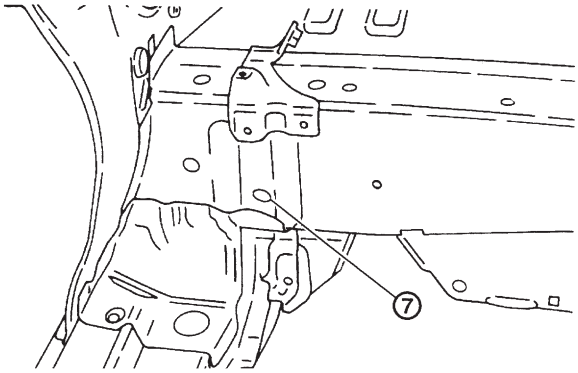

B5M0197A

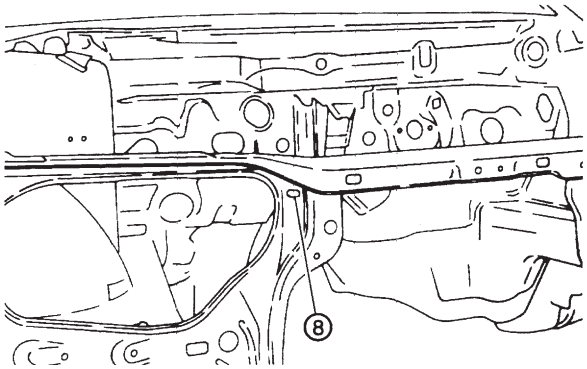

B5M0198A

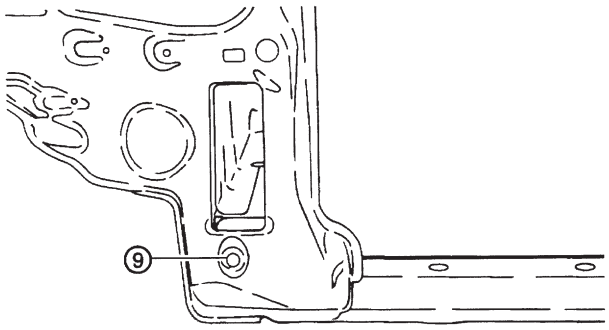

B5M0199A

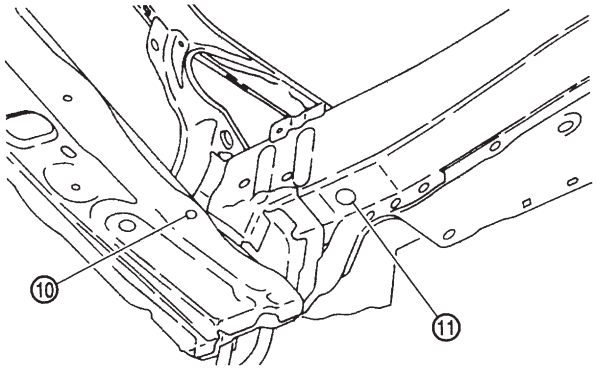

B5M0200A

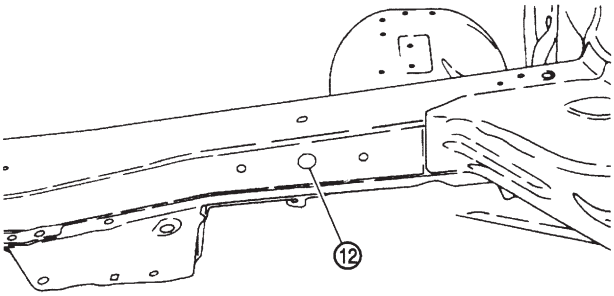

B5M0201A

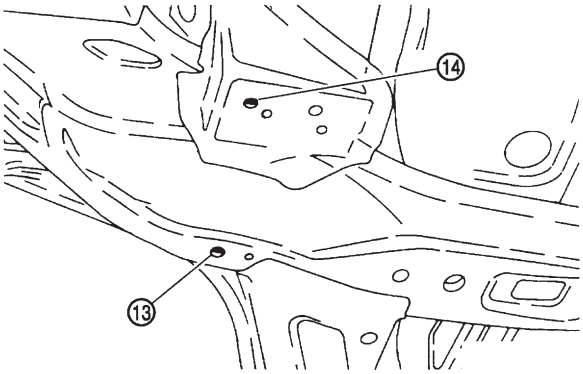

B5M0202A

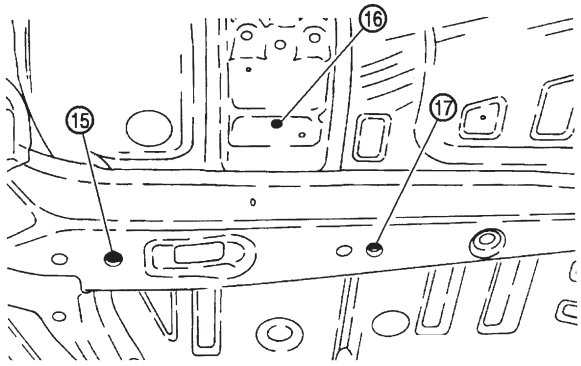

B5M0203A

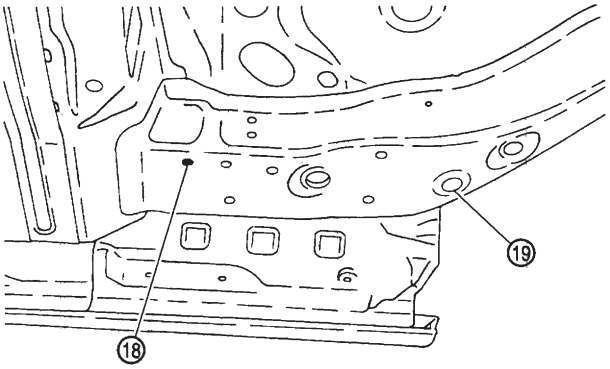

B5M0204A

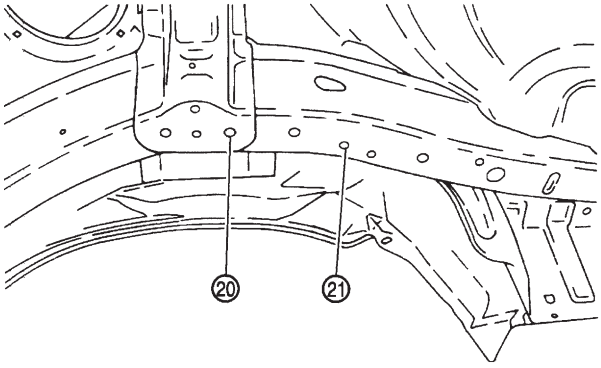

B5M0205A

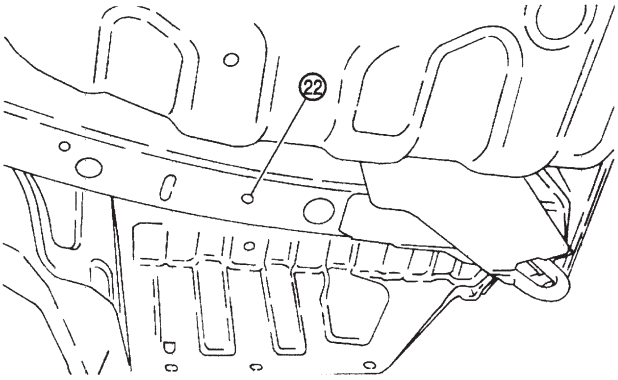

B5M0206A

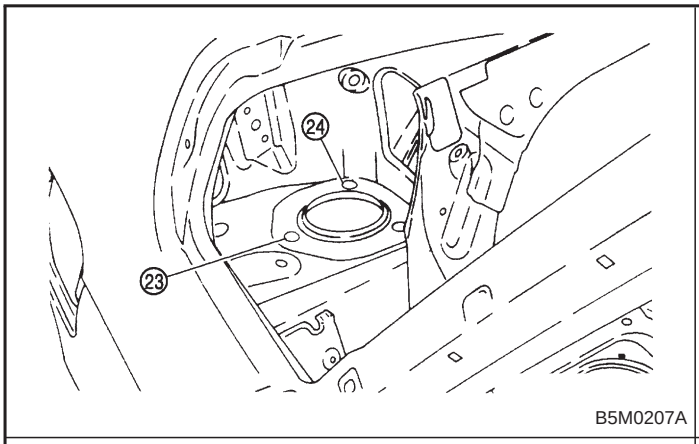

B5M0207A

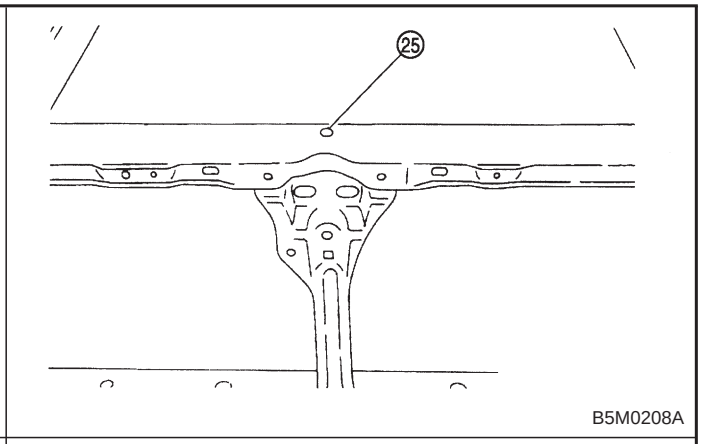

B5M0208A

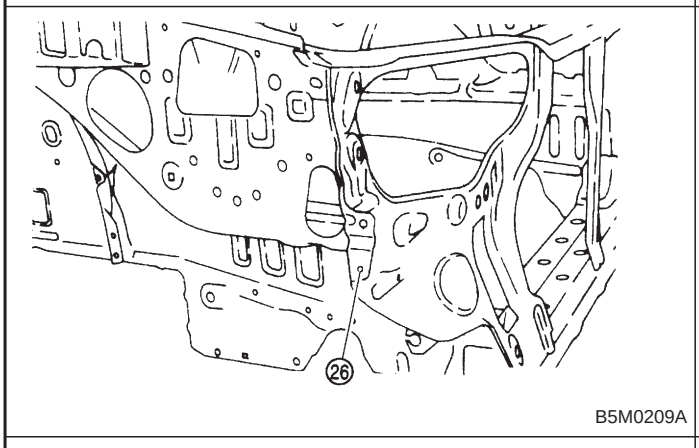

B5M0209A

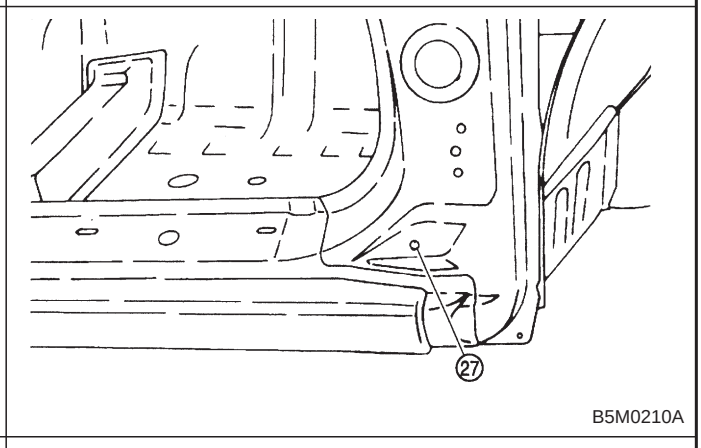

B5M0210A

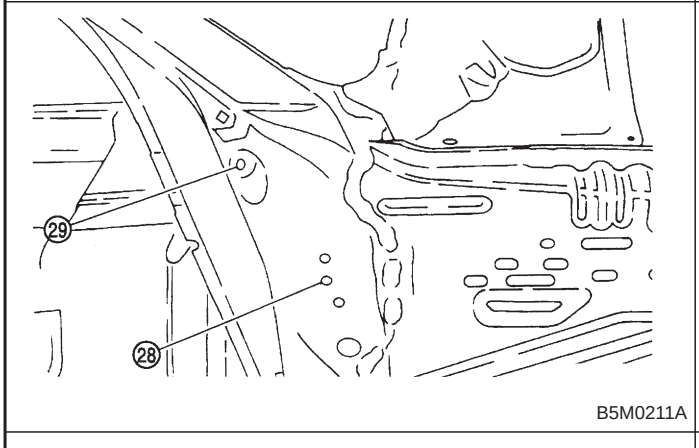

B5M0211A

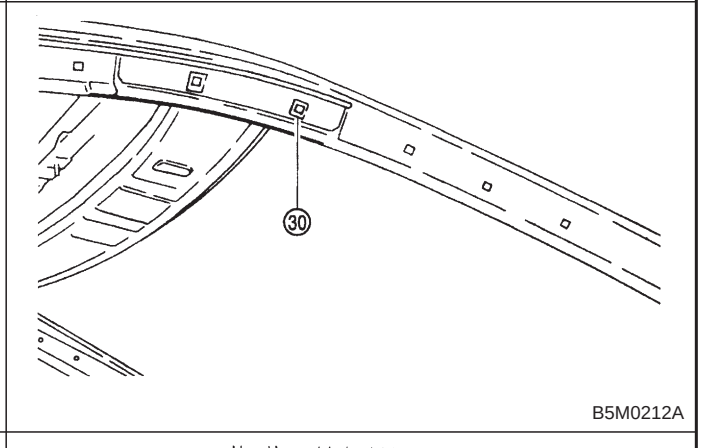

B5M0212A

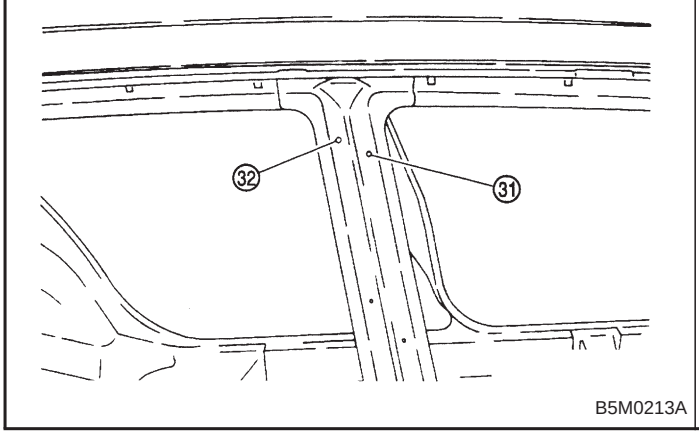

B5M0213A

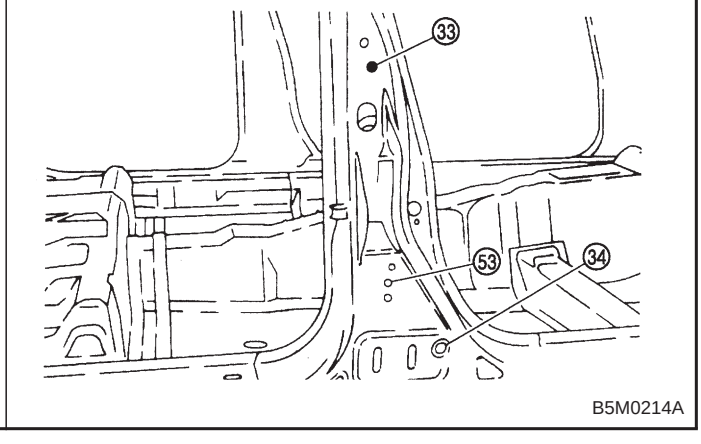

B5M0214A

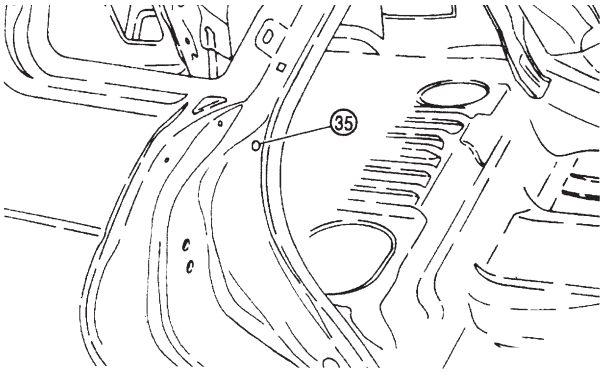

B5M0215A

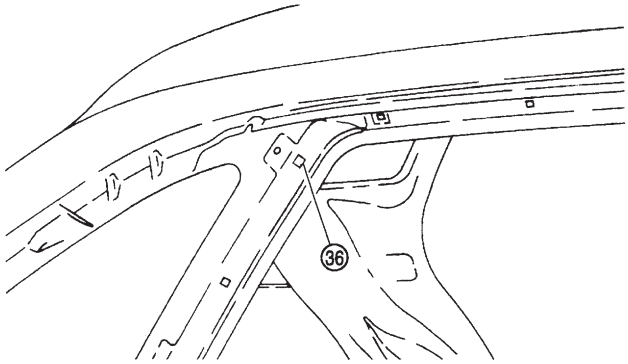

B5M0216A

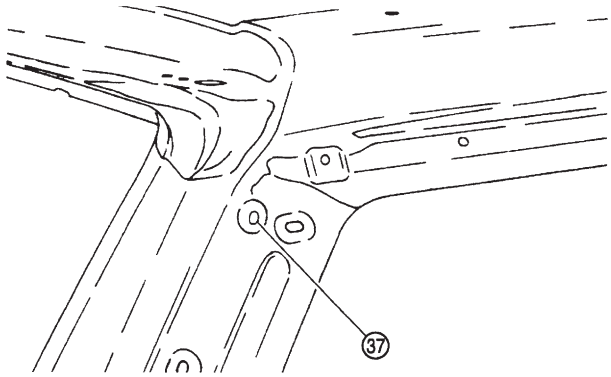

B5M0217A

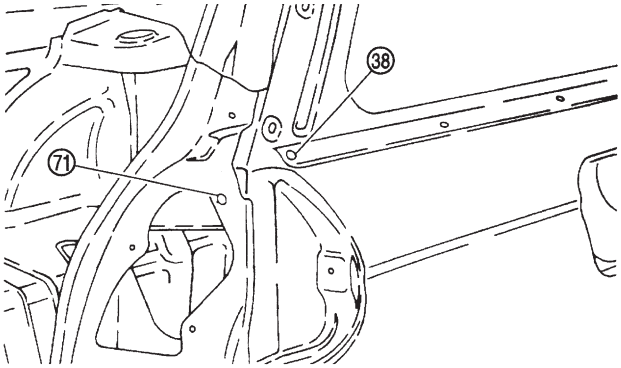

B5M0218A

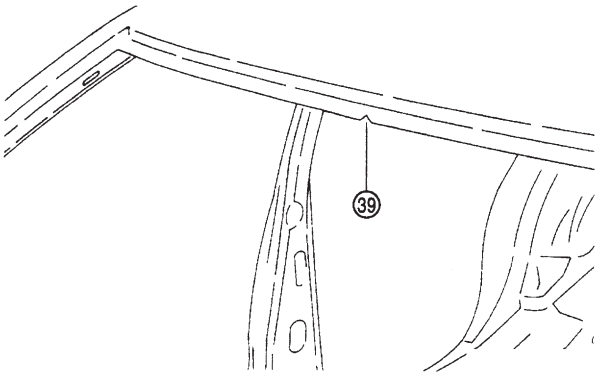

B5M0219A

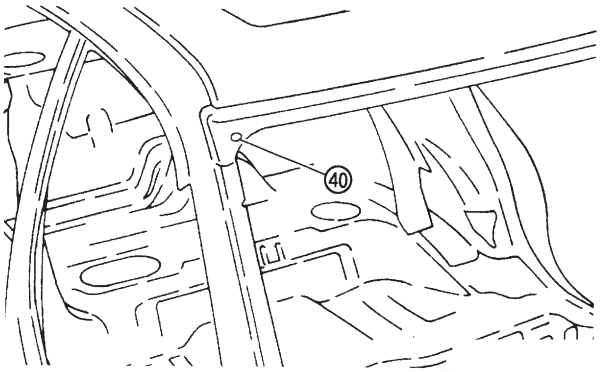

B5M0220A

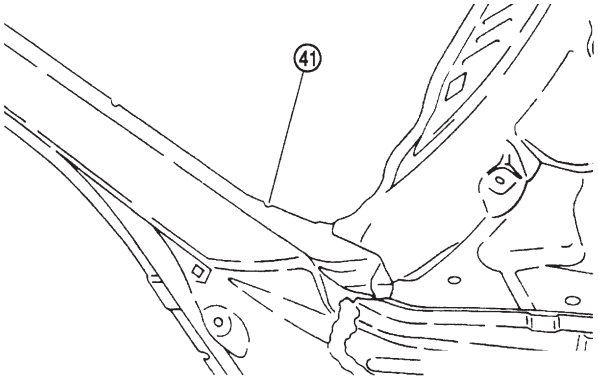

B5M0221A

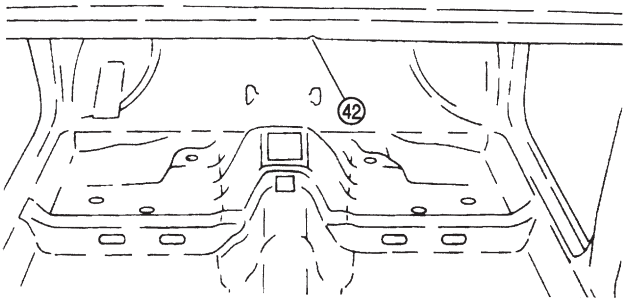

B5M0222A

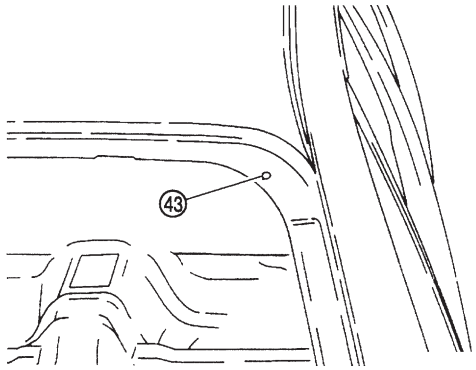

B5M0223A

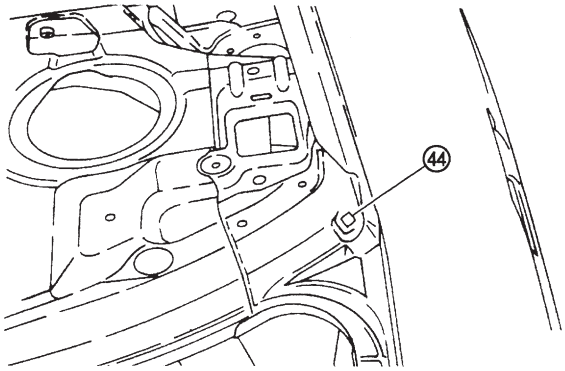

B5M0224A

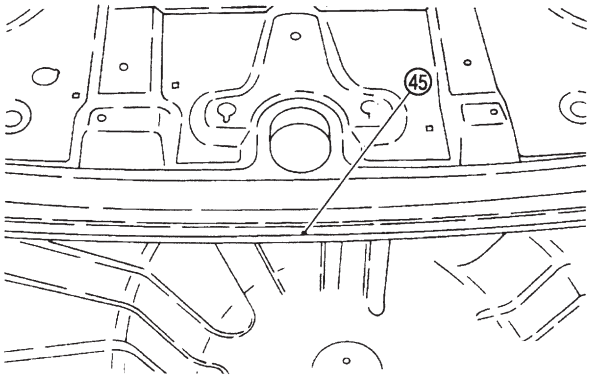

B5M0225A

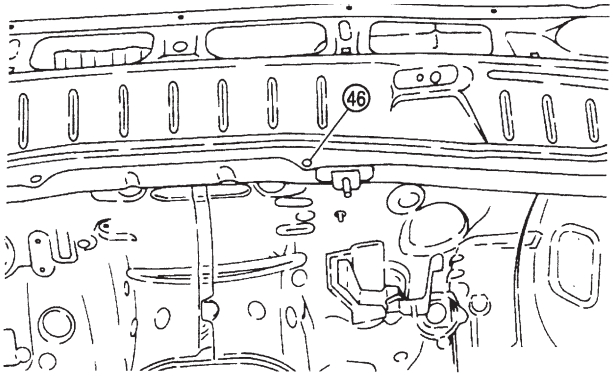

B5M0226A

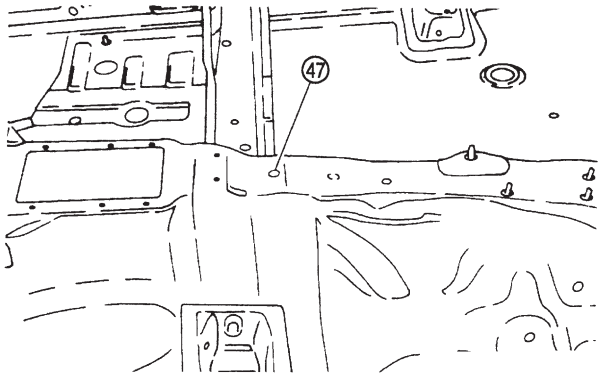

B5M0227A

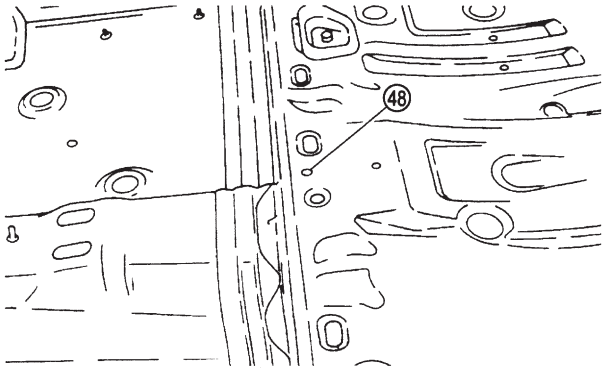

B5M0228A

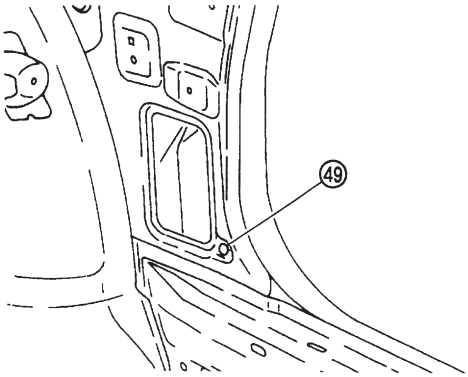

B5M0229A

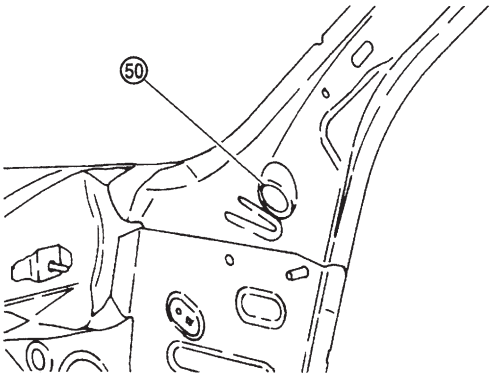

B5M0230A

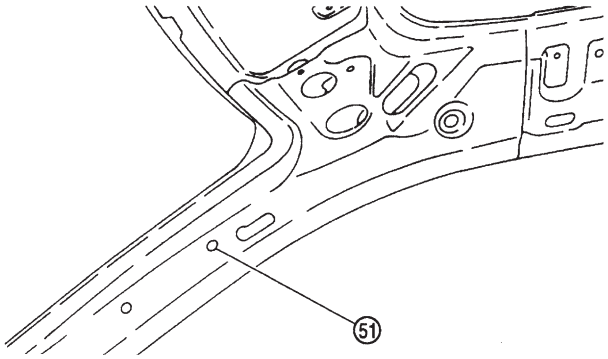

B5M0231A

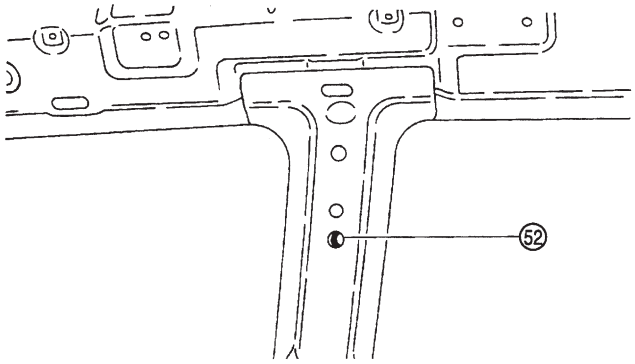

B5M0232A

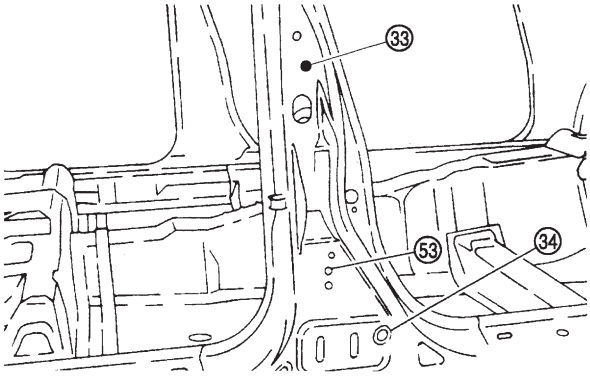

B5M0233A

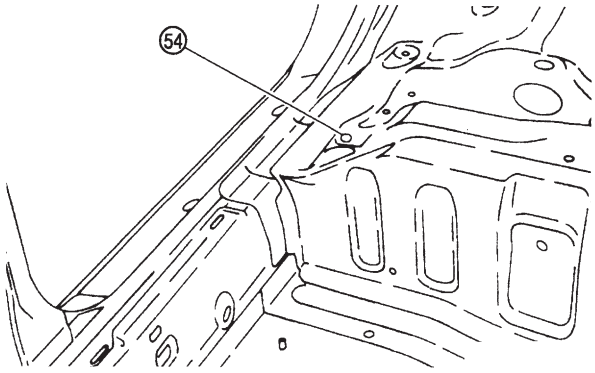

B5M0234A

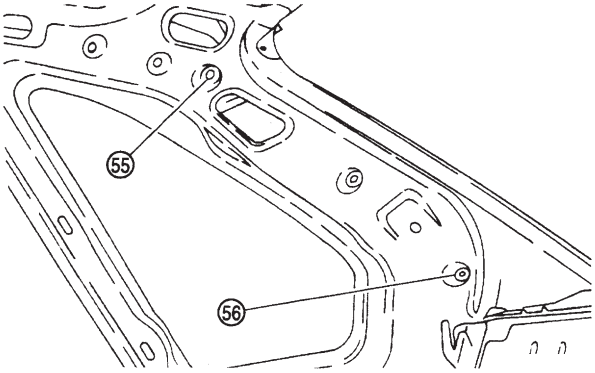

B5M0235A

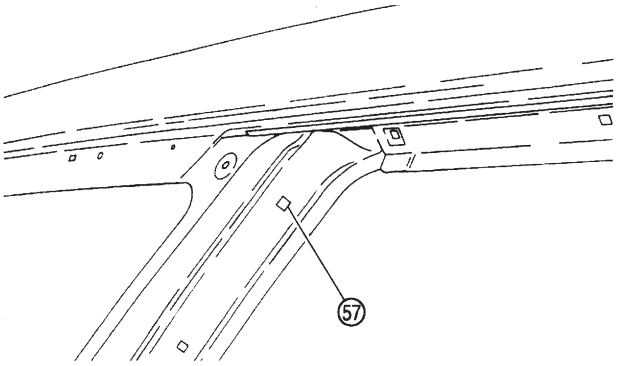

B5M0236A

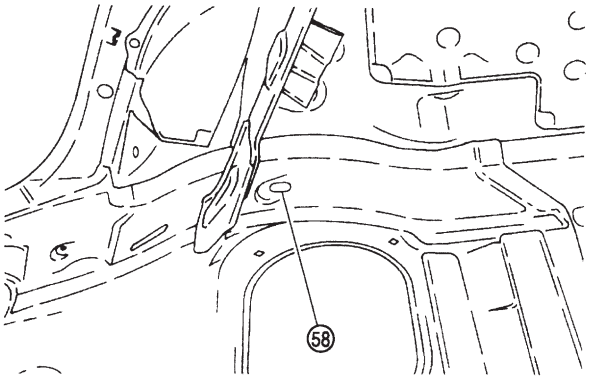

B5M0237A

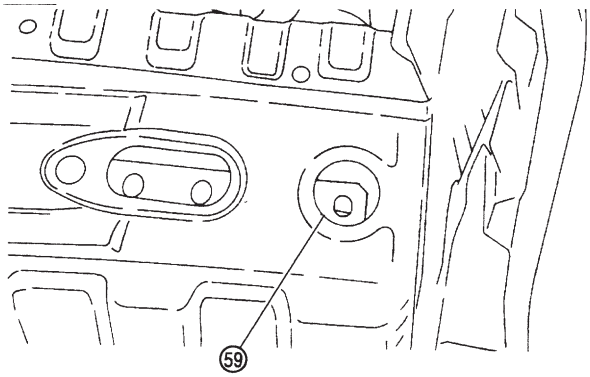

B5M0238A

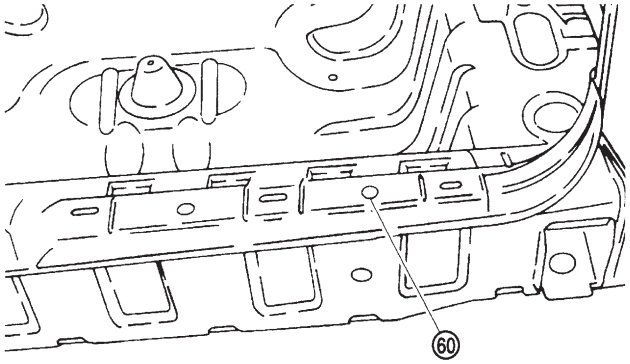

B5M0239A

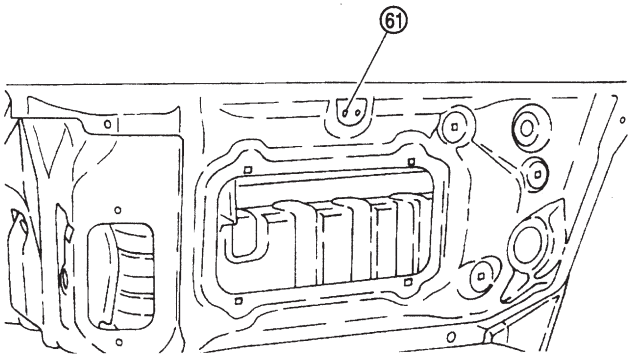

B5M0240A

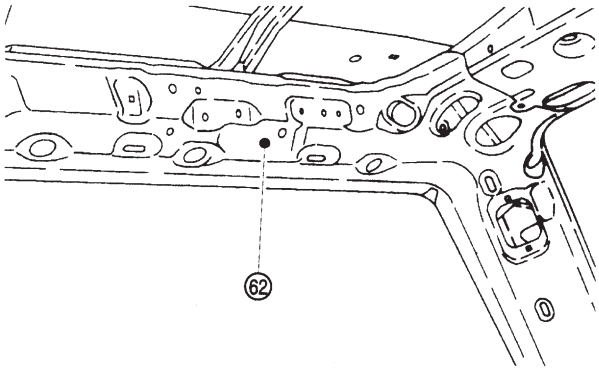

B5M0241A

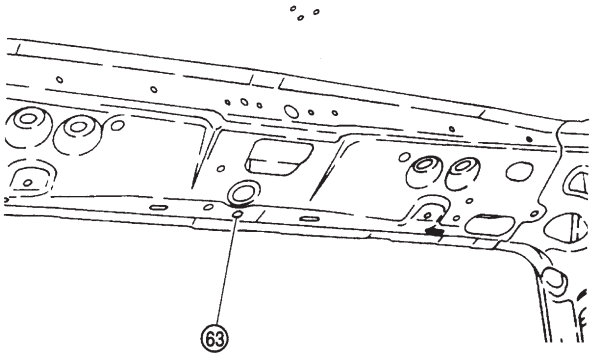

B5M0242A

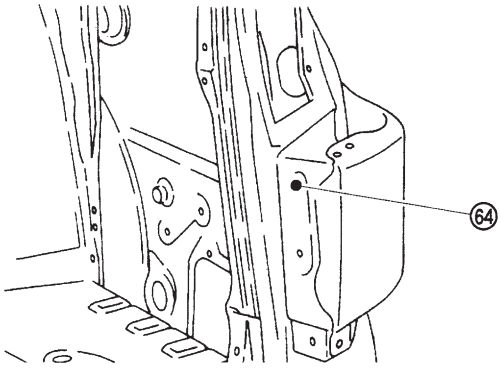

B5M0243A

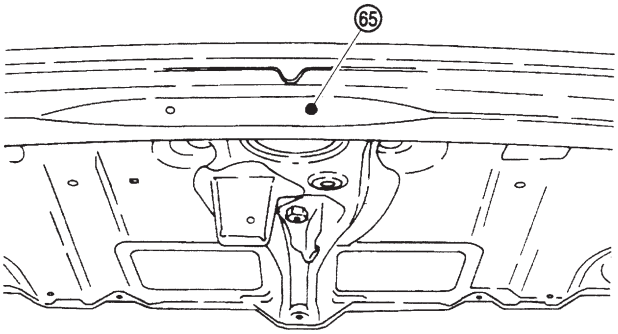

B5M0244A

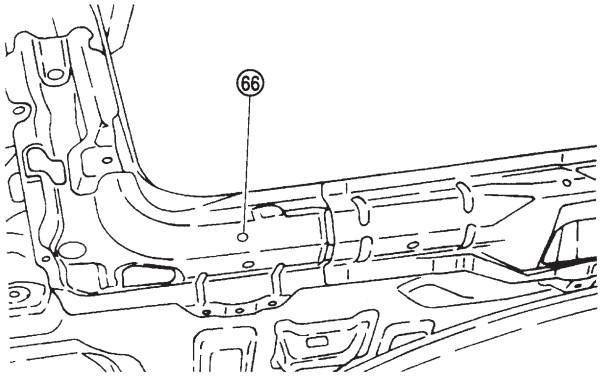

B5M0245A

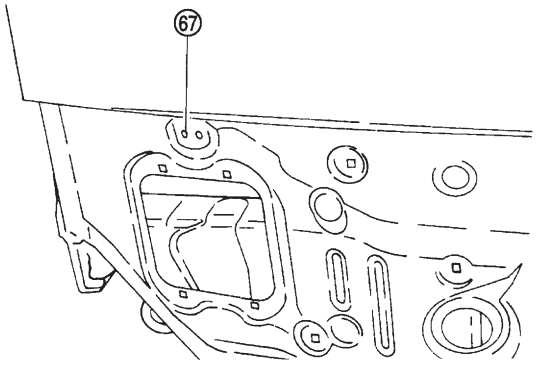

B5M0246A

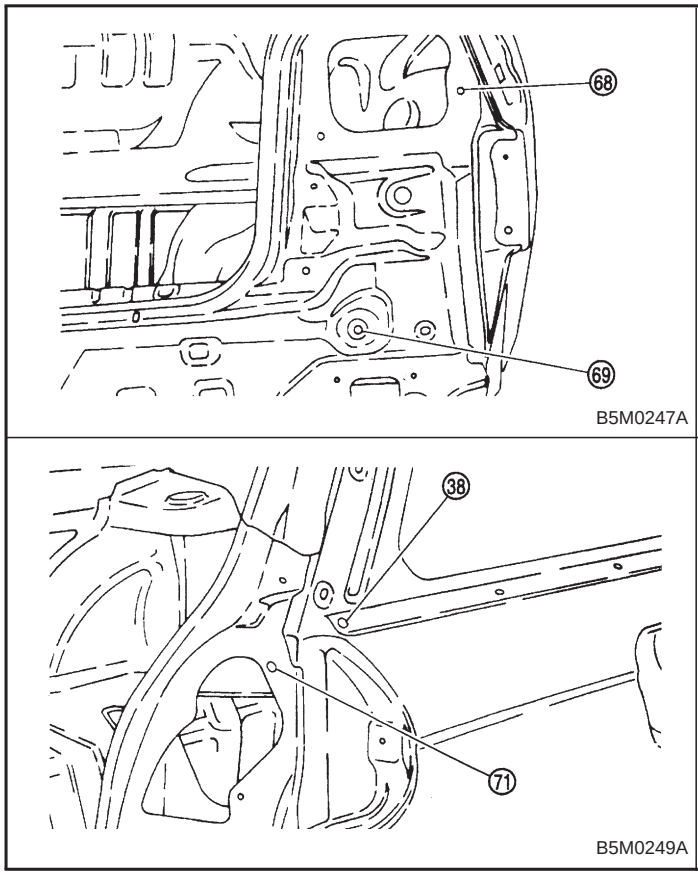

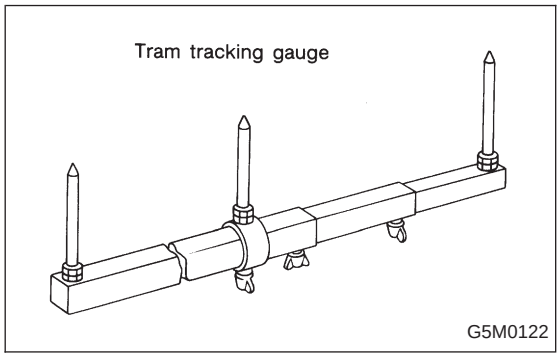

3. Datum Dimensions

Use a tram tracking gauge to measure all dimensions. If a measuring tape is used, be extremely careful because it tends to deflect or twist, which results in a false reading.

NOTE:

- A suffix character “R” or “L” refers to the right or the left.
- All dimensions refer to the distance between the centers of holes measured in a straight line.
- Each dimension indicates a projected dimension between hole centers.