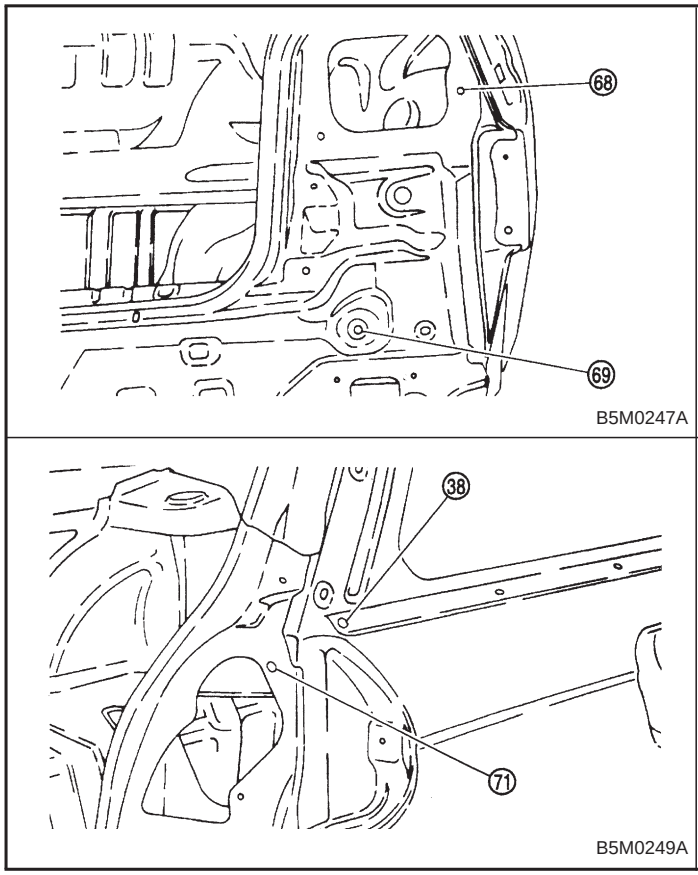

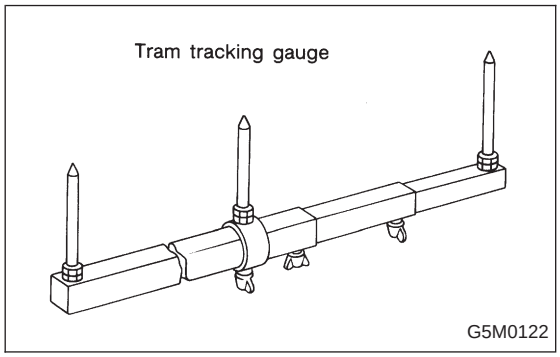

3. Datum Dimensions

Use a tram tracking gauge to measure all dimensions. If a measuring tape is used, be extremely careful because it tends to deflect or twist, which results in a false reading.

NOTE:

- A suffix character “R” or “L” refers to the right or the left.
- All dimensions refer to the distance between the centers of holes measured in a straight line.
- Each dimension indicates a projected dimension between hole centers.

1. FRONT STRUCTURE

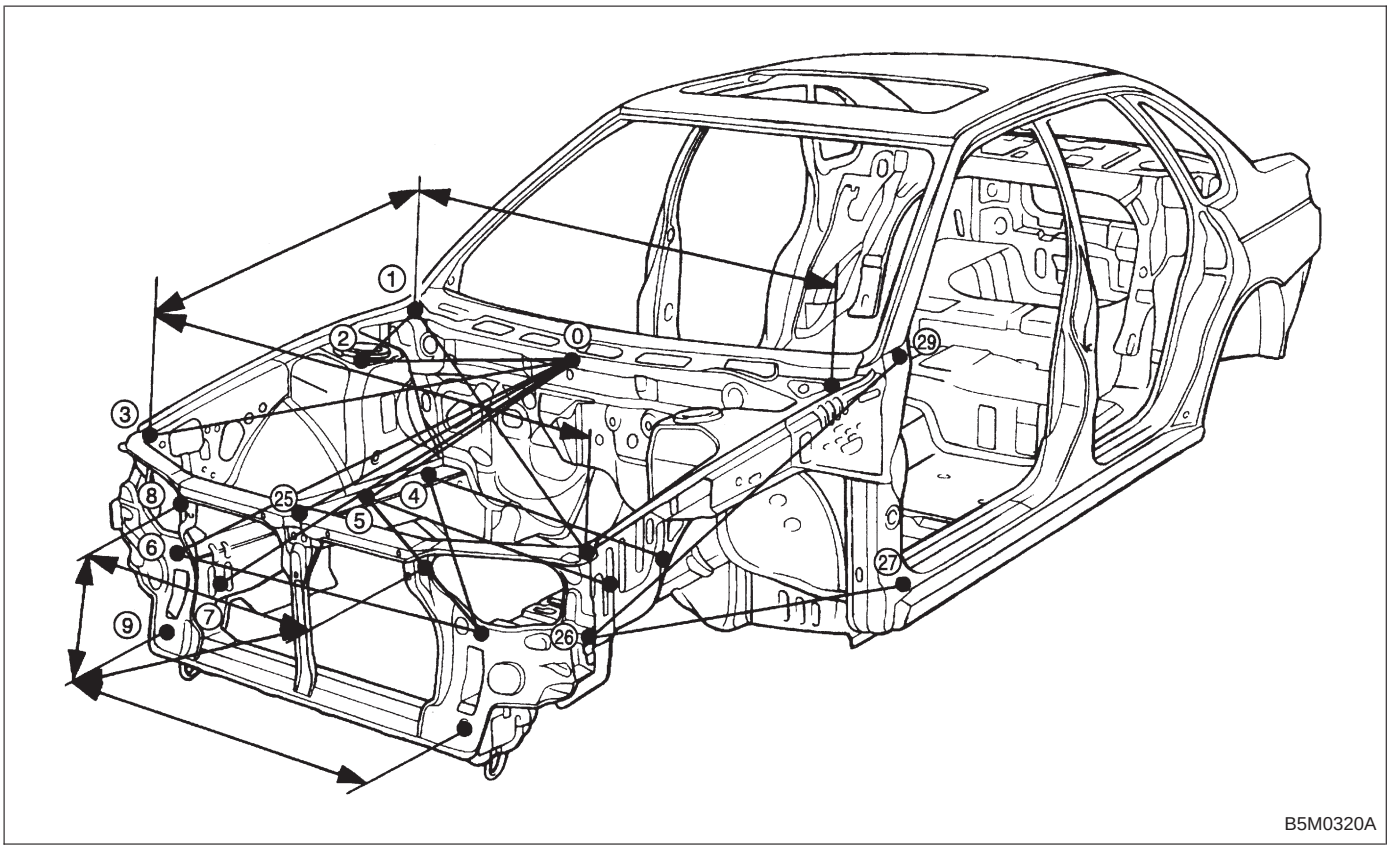

Unit: mm (in)

⓪ — ②R, ⓪ — ②L : 522 (20.55)

⓪ — ⑥R, ⓪ — ⑥L : 980 (38.58)

⓪ — ⑦R, ⓪ — ⑦L : 966 (38.03)

⓪ — ③R, ⓪ — ③L : 1,008 (39.68)

⓪ — ㉕ : 863 (33.98)

①R — ②R, ①L — ②L : 373 (14.69)

②R — ②L : 966 (38.03)

⑤R — ⑤L : 850 (33.46)

⑤R — ⑥L, ⑥R — ⑤L : 1,011 (39.80)

⑥R — ⑥L : 914 (35.98)

④R — ⑥L, ⑥R — ④L : 1,115 (43.90)

①R — ③R, ①L — ③L : 845 (33.27)

⑧R — ⑨R, ⑧L — ⑨L : 347 (13.66)

①R — ①L : 1,408 (55.43)

①R — ③L, ③R — ①L : 1,623 (63.90)

③R — ③L : 1,364 (53.70)

④R — ④L : 803 (31.61)

⑨R — ⑨L : 924 (36.38)

⑨R — ⑧L, ⑧R — ⑨L : 892 (35.12)

⑧R — ⑧L : 730 (28.74)

㉖R — ㉙R, ㉖L — ㉙L : 1,191 (46.89)

㉖R — ㉗R, ㉖L — ㉗L : 1,144 (45.04)

2. CENTER STRUCTURE

Unit: mm (in)

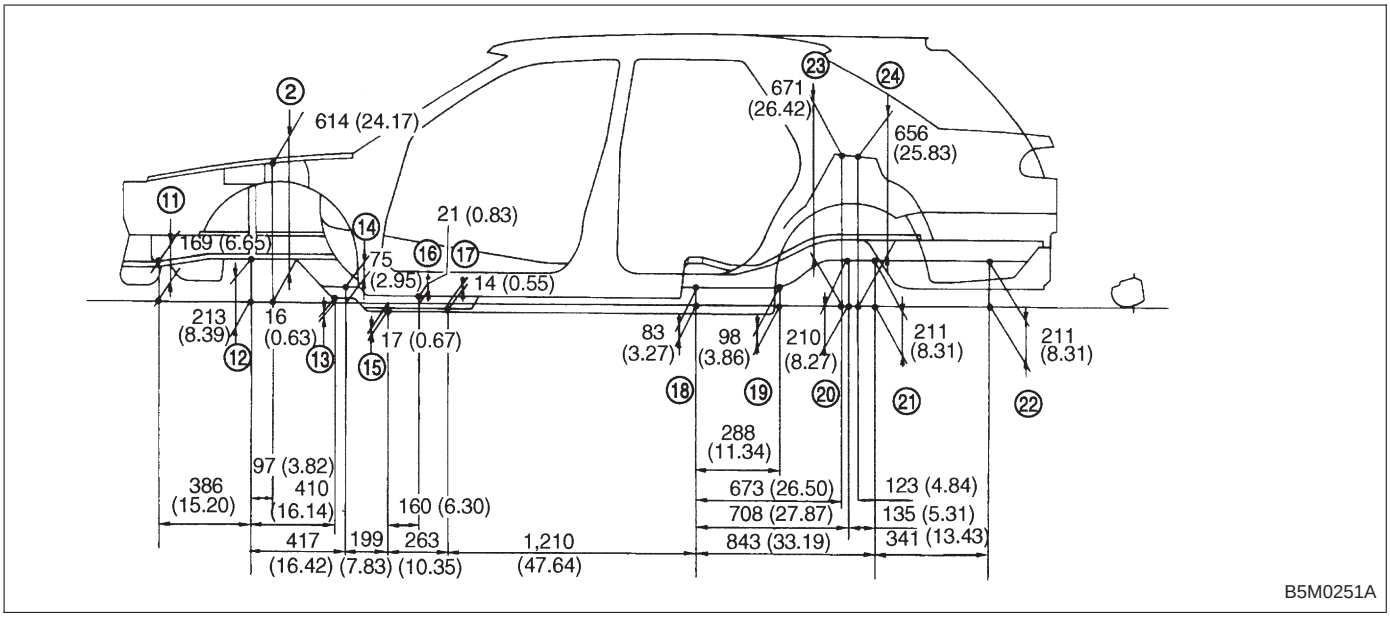

Unit: mm (in)

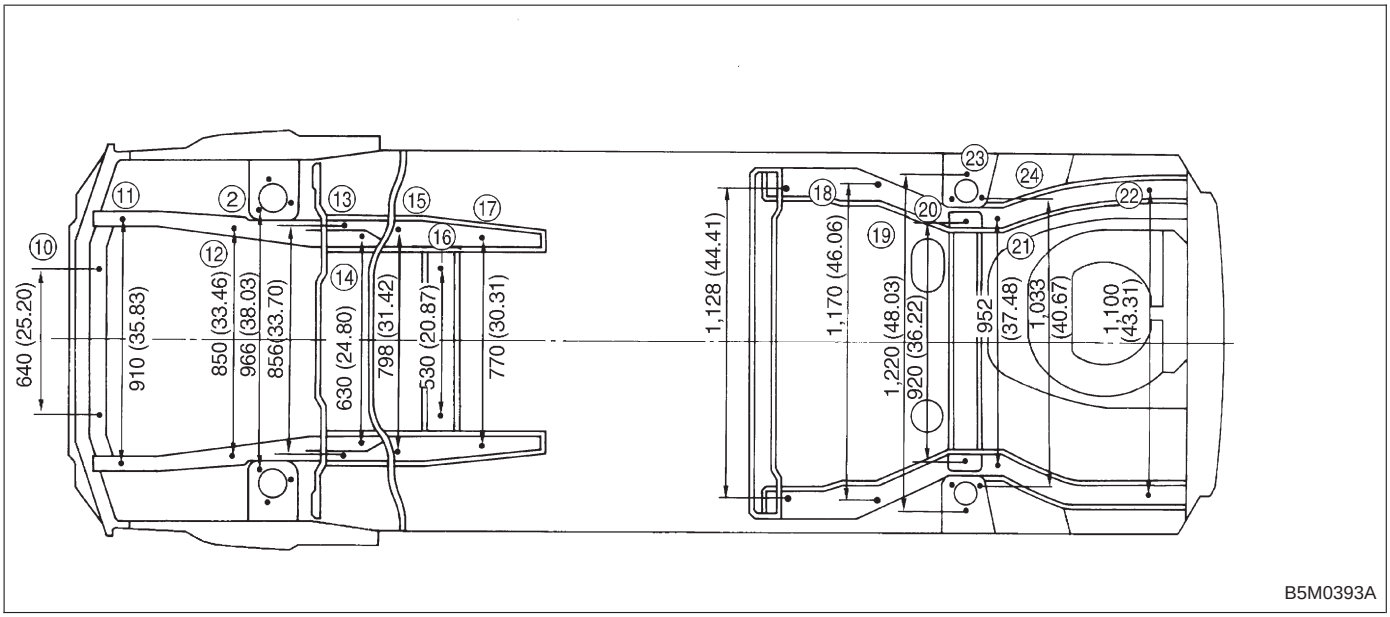

Unit: mm (in)

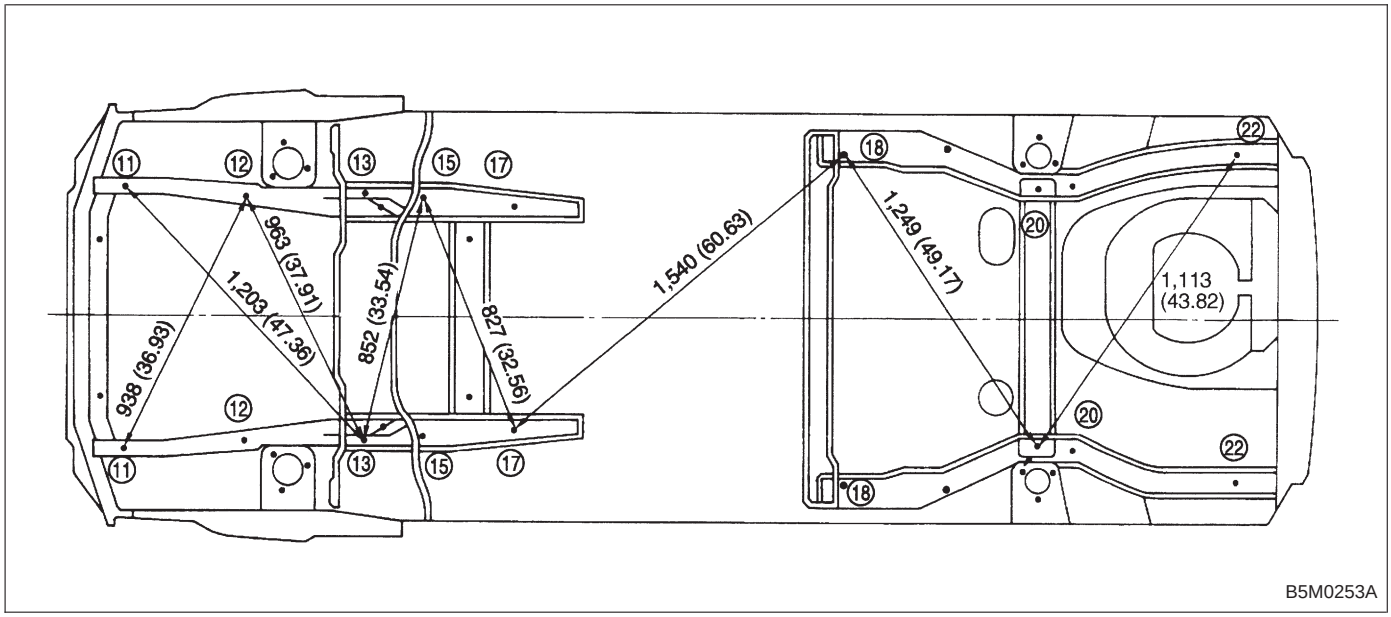
11
12
13
15
17
18
20
22
963 (37.91)
1,203 (47.36)
938 (36.93)
852 (33.54)
827 (32.56)
1,540 (60.63)
1,249 (49.17)
1,113
(43.82)
B5M0253A

3. FRONT WINDSHIELD AND REAR WINDOW

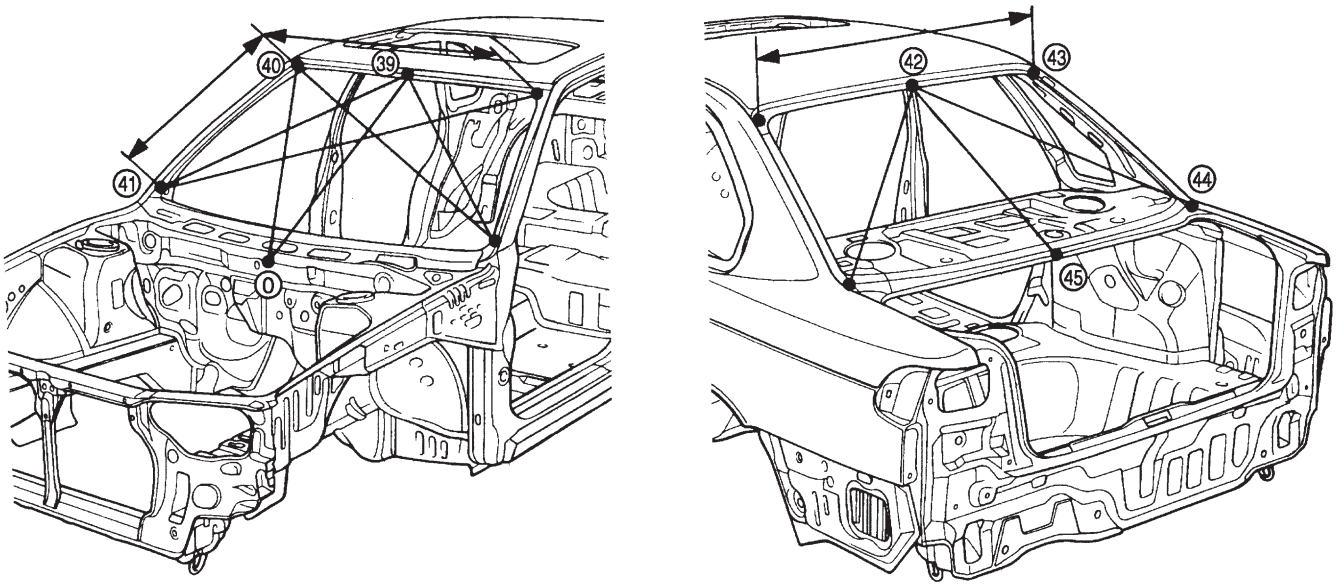

B5M0254A

Unit: mm (in)

⓪ — ㊴ : 934 (36.77)

⓪ — ㊵R
⓪ — ㊵L } : 1,133 (44.61)

㊴ — ㊶R
㊴ — ㊶L } : 940 (37.01)

㊵R — ㊵L : 1,076 (42.36)

㊵R — ㊶L
㊶R — ㊵L } : 1,411 (55.55)

㊵R — ㊶R
㊵L — ㊶L } : 700 (27.56)

㊶R — ㊶L : 1,396 (54.96)

㊷ — ㊹R
㊷ — ㊹L } : 871 (34.29)

㊷ — ㊺ : 760 (29.92)

㊸R — ㊸L : 986 (38.82)

㊹R — ㊹L : 1,216 (47.87)

4. DOORS

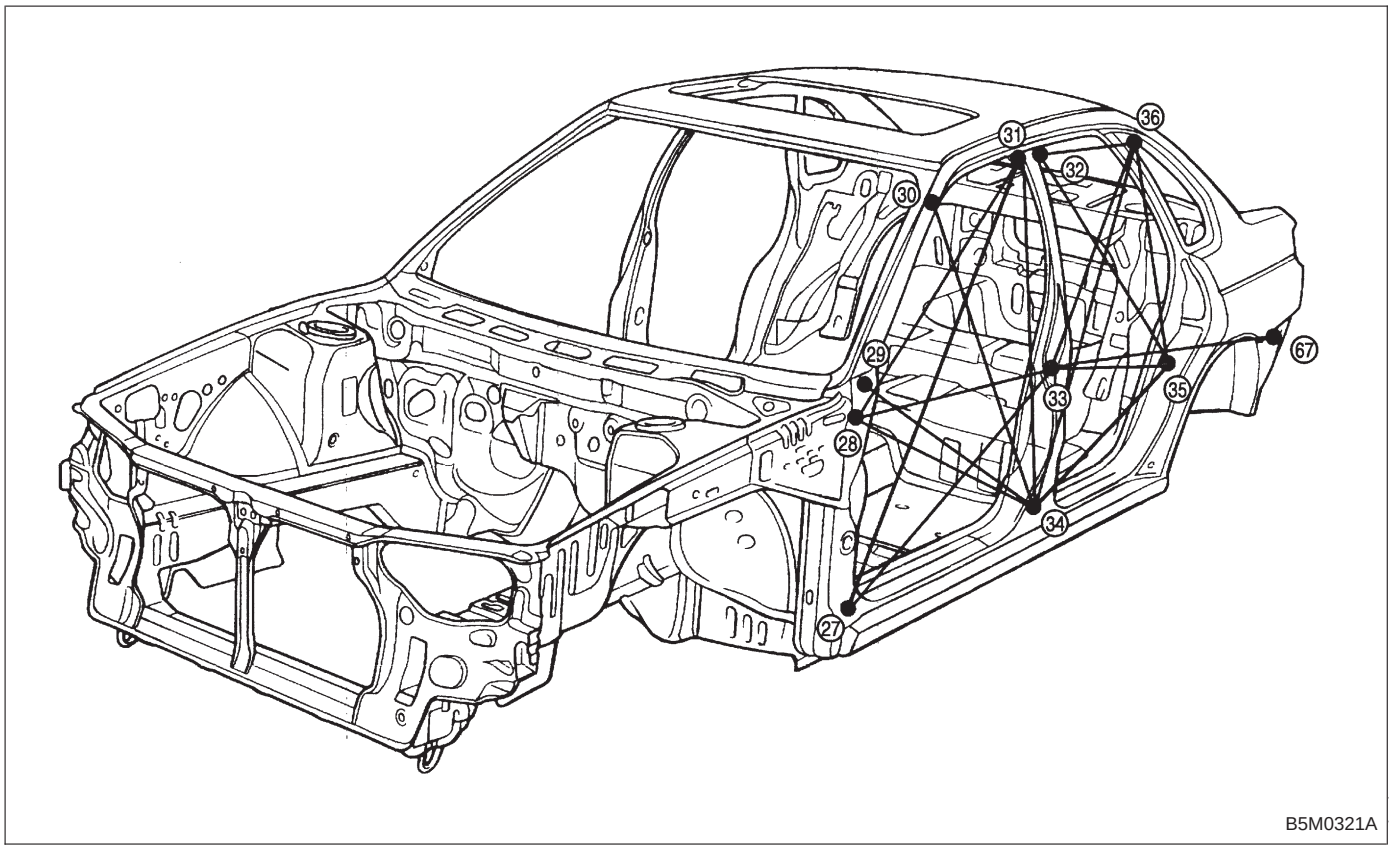

Unit: mm (in)

27 R — 31 R 27 L — 31 L : 1,445 (56.89)	28 R — 34 R 28 L — 34 L : 1,029 (40.51)	34 R — 36 R 34 L — 36 L : 1,193 (46.97)
27 R — 33 R 27 L — 33 L : 1,087 (42.80)	29 R — 34 R 29 L — 34 L : 1,020 (40.16)	32 R — 35 R 32 L — 35 L : 870 (34.25)
27 R — 34 R 27 L — 34 L : 921 (36.26)	30 R — 34 R 30 L — 34 L : 974 (38.35)	33 R — 35 R 33 L — 35 L : 891 (35.08)
28 R — 31 R 28 L — 31 L : 1,246 (49.06)	31 R — 34 R 31 L — 34 L : 931 (36.65)	35 R — 36 R 35 L — 36 L : 471 (18.54)
28 R — 33 R 28 L — 33 L : 1,043 (41.06)	34 R — 35 R 34 L — 35 L : 1,101 (43.35)	33 R — 67 R 33 L — 67 L : 1,773 (69.80)

5. TRUNK LID AND REAR GATE

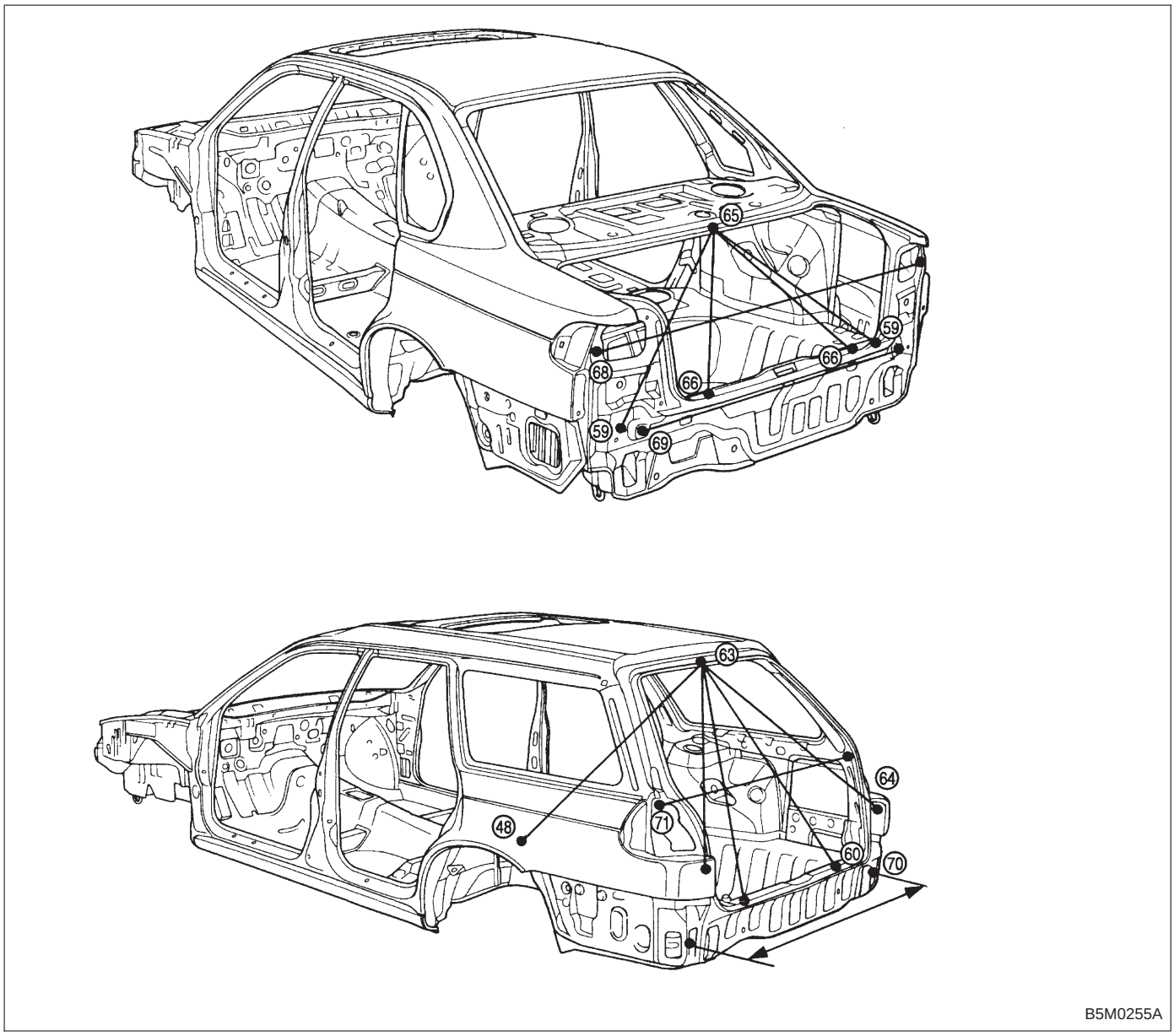

Unit: mm (in)

TRUNK LID

68 R — 68 L : 1,346 (52.99)

69 R — 69 L : 1,080 (42.52)

65 — 59 R : 771 (30.35)
65 — 59 L : 785 (30.91)

65 — 66 R : 592 (23.31)
65 — 66 L : 604 (23.78)

REAR GATE

48 — 60 R
48 — 60 L } : 1,707 (67.20)

48 — 63 : 1,466 (57.72)

64 R — 64 L : 1,213 (47.76)

63 — 64 R
63 — 64 L } : 990 (38.98)

63 — 60 R
63 — 60 L } : 1,003 (39.49)

60 R — 64 L
60 L — 64 R } : 984 (38.74)

71 R — 71 L : 1,393 (54.84)

70 R — 70 L : 1,320 (51.97)

6. COMPARTMENT

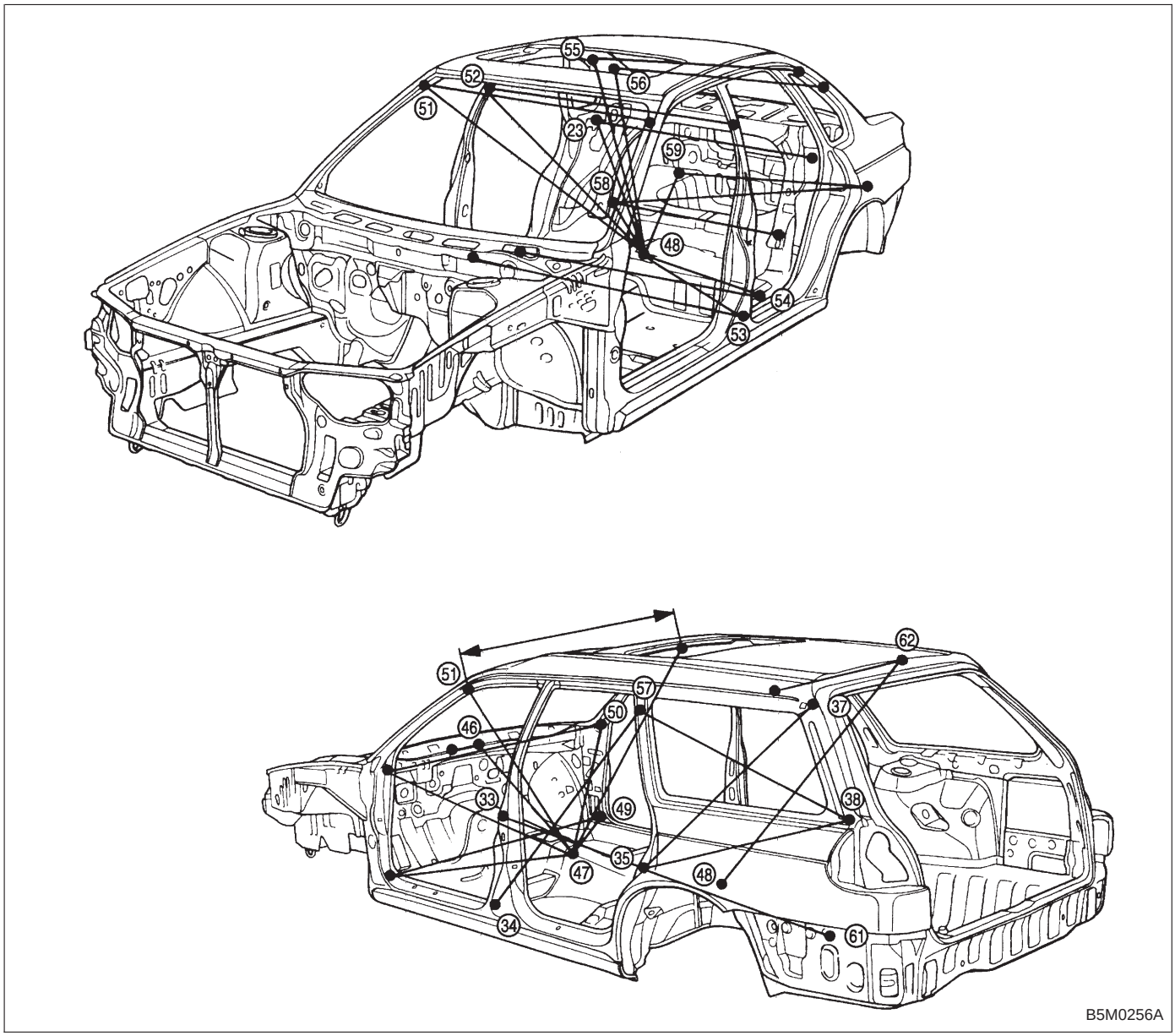

Unit: mm (in)

48 — 51 R, 48 — 51 L : 1,315 (51.77)

48 — 52 R, 48 — 52 L : 1,033 (40.67)

48 — 53 R, 48 — 53 L : 866 (34.09)

48 — 54 R, 48 — 54 L : 612 (24.09)

48 — 55 R, 48 — 55 L : 1,120 (44.09)

48 — 56 R, 48 — 56 L : 1,201 (47.28)

48 — 23 R, 48 — 23 L : 1,065 (41.93)

48 — 58 R, 48 — 58 L : 747 (29.41)

48 — 59 R, 48 — 59 L : 1,621 (63.82)

51 R — 51 L : 1,148 (45.20)

52 R — 52 L : 1,153 (45.39)

53 R — 53 L : 1,534 (60.39)

54 R — 54 L : 1,220 (48.03)

23 R — 54 L, 23 L — 54 R : 1,520 (59.84)

55 R — 55 L : 1,037 (40.83)

56 R — 56 L : 1,206 (47.48)

23 R — 23 L : 1,210 (47.64)

58 R — 58 L : 1,000 (39.37)

58 R — 59 L, 59 R — 58 L : 1,435 (56.50)

59 R — 59 L : 1,115 (43.90)

47 — 46 : 840 (33.07)

47 — 49 R : 905 (35.63)

47 — 49 L : 913 (35.94)

47 — 50 R : 981 (38.62)

47 — 50 L : 988 (38.90)

47 — 51 R : 992 (39.06)
47 — 51 L : 998 (39.29)

*48 — 62 R, *48 — 62 L : 1,327 (52.24)

*62 R — 62 L : 1,000 (39.37)

*35 R — 37 R, *35 L — 37 L : 805 (31.69)

*35 R — 38 R, *35 L — 38 L : 928 (36.54)

*49 R — 49 L : 1,399 (55.08)

*50 R — 50 L : 1,378 (54.25)

*34 R — 57 R, *34 L — 57 L : 1,207 (47.52)

*35 R — 57 R, *35 L — 57 L : 461 (18.15)

*33 R — 61 R, *33 L — 61 L : 1,773 (69.80)

*: Wagon only