4. Datum Points and Dimensions Concerning On-Board Aiming Adjustment

If headlight aiming is misaligned due to damaged body panel, repair headlight mating surface using body and headlight datum points as a guide.

NOTE:
It is recommended to conduct On-Board Aiming Adjustment with headlights turned off.
If turned on during the adjustment, the duration should be within two minutes.

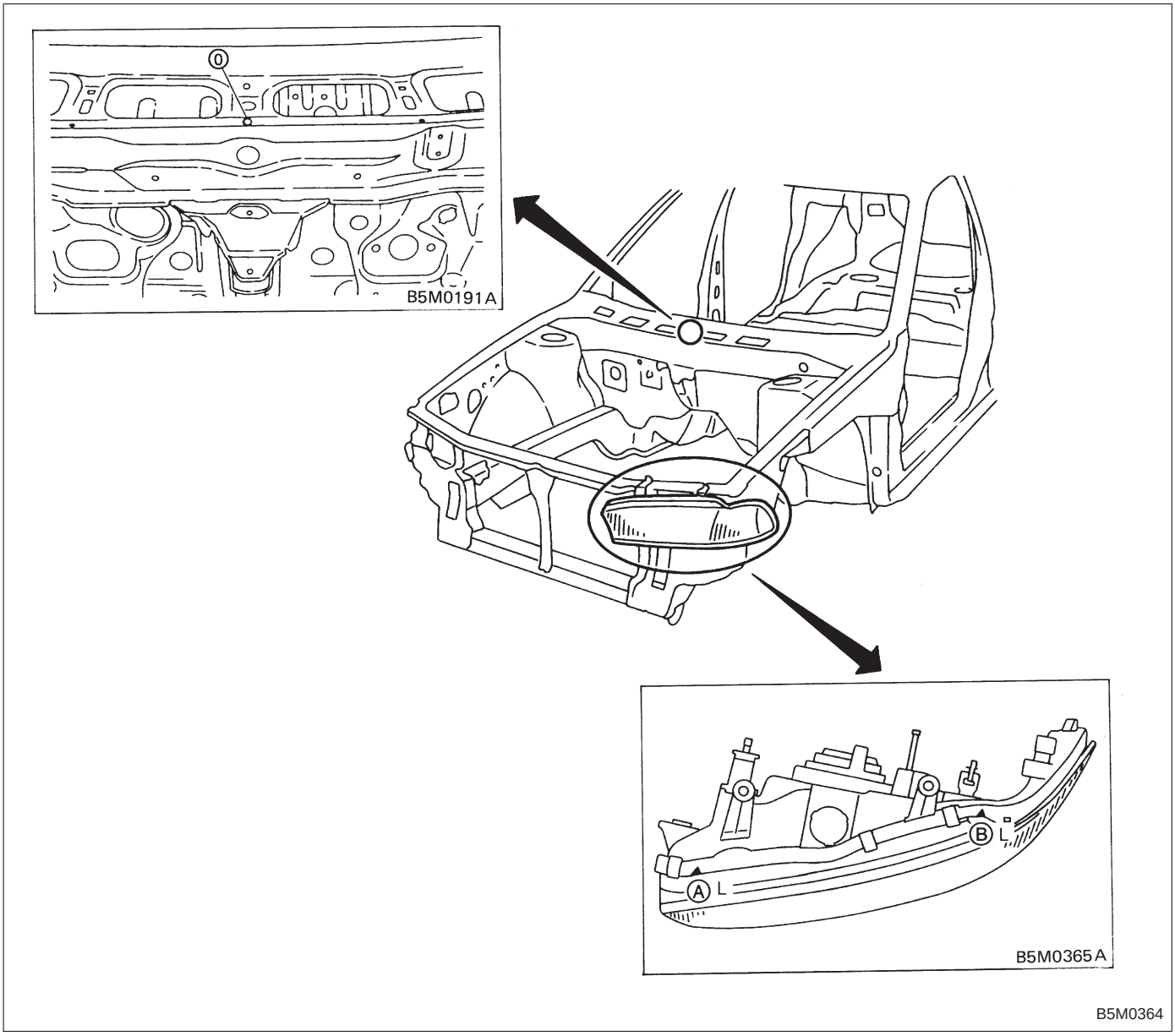

Unit: mm (in)

O — A L O — A R	1,015 (39.96)
O — B L O — B R	1,057 (41.61)