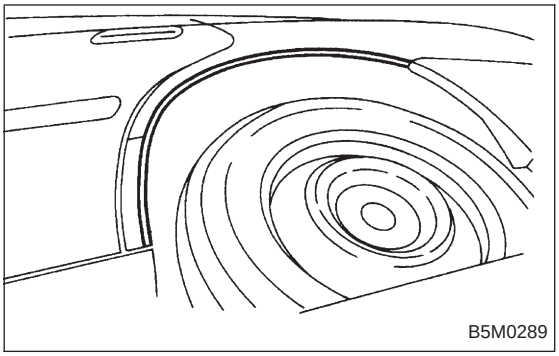

2. REAR ARCH PROTECTOR

Remove rear arch protector.

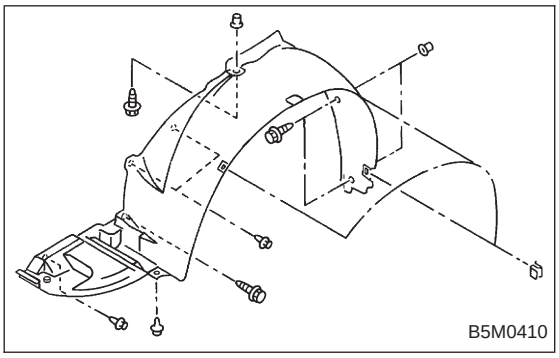

3. MUD GUARD (OUTBACK WITH STEP ROOF)

1) Jack-up vehicle to remove tire.
2) Remove screws and clips. Move mud guard toward the center of the body and remove mud guard.

B: INSTALLATION

Installation is in the reverse order of removal.

CAUTION:
Only use new screws and clips.

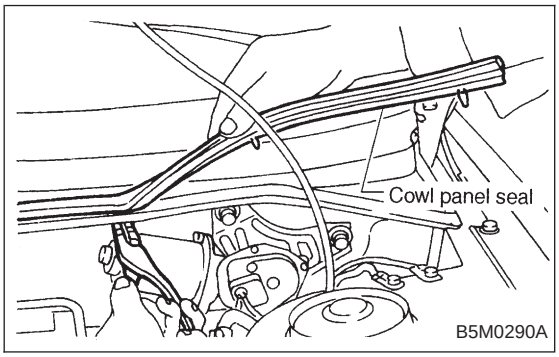

10. Cowl Panel

A: REMOVAL

1) Remove wiper arms.
2) Open front hood.
3) Remove cowl panel seal using a plier.

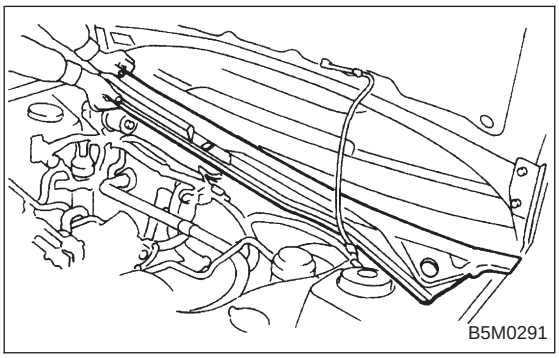

4) Lift cowl panel and detach it from clips attached to body panel.

B: INSTALLATION

Installation is in the reverse order of removal.

NOTE:
When installing cowl panel, first attach a middle clip to the cap attached to body panel. Then tap the cowl panel to attach it to other clips.

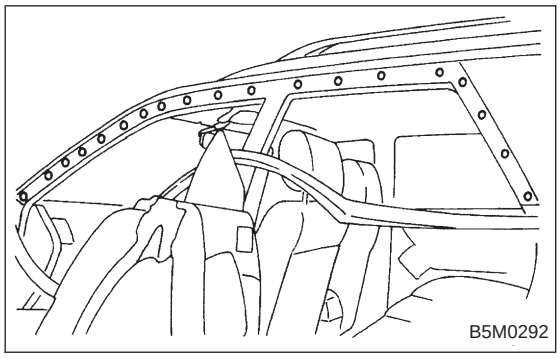

11. Molding and Retainer

A: REMOVAL

1) Remove weatherstrip.
2) Remove tapping screws.

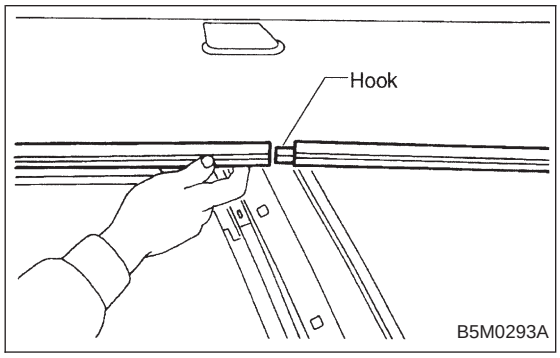

B: INSTALLATION

Installation is in the reverse order of removal.

NOTE:
Insert molding and retainer onto hook, then fasten with screws.

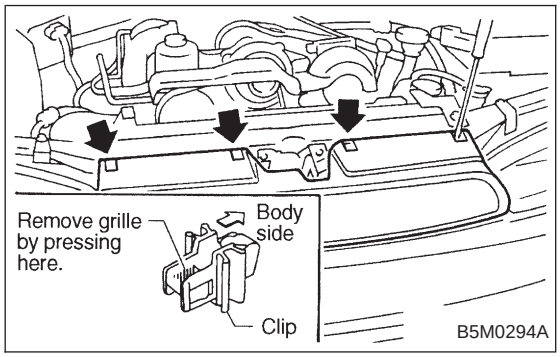

12. Front Grille

A: REMOVAL

1) Remove four upper clips from body panel. To facilitate removal, press portion shown in figure using screwdriver.
2) Pull front grille to detach it from two lower clips.
(Two lower clips remain on headlight.)

B: INSTALLATION

Attach all clips to grille. Align them with clip hole in body and push them into place.