4. Front Bumper AIRBAG

A: REMOVAL

SUPPLEMENTAL RESTRAINT SYSTEM "AIRBAG"

Airbag system wiring harness is routed near the front bumper assembly.

CAUTION:

- **All Airbag system wiring harness and connectors are colored yellow. Do not use electrical test equipment on these circuits.**
- **Be careful not to damage Airbag system wiring harness when servicing the front bumper assembly.**

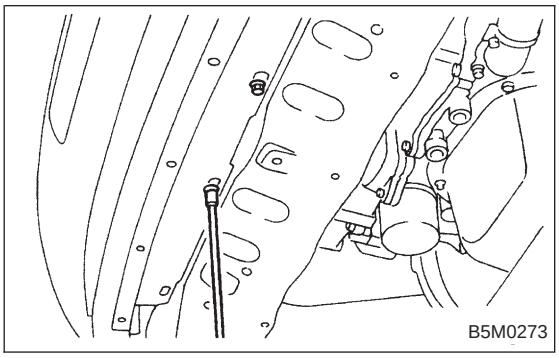

1. EXCEPT OUTBACK WITH STEP ROOF

1) Disconnect the ground cable from the battery.
2) Remove two bolts from lower center of bumper.
3) Remove mud guard. <Ref. to 5-1 [W9A1].>

NOTE:
It is not necessary to remove the entire mud guard. Remove clips from the front section of mud guard, if necessary.

4) Remove the canister. <Ref. to 2-1 [W3A0].>

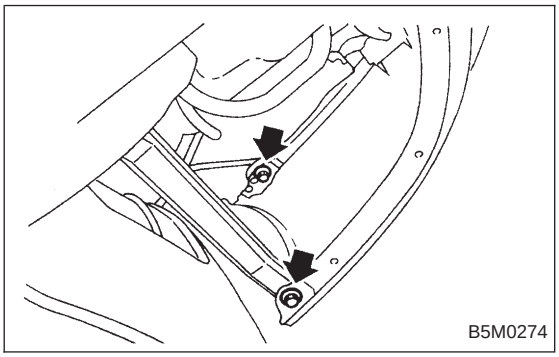

5) Remove two bolts from side of bumper.
6) Remove front grill. <Ref. to 5-1 [W12A0].>
7) Remove headlight. <Ref. to 6-2 [W4B2].>

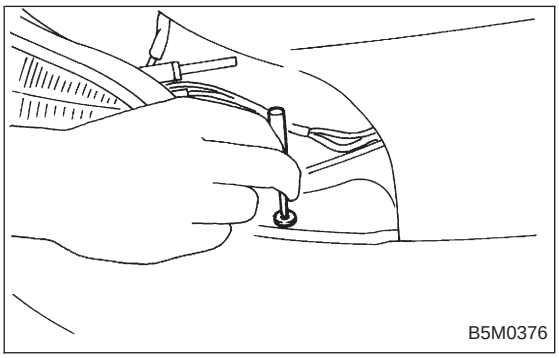

8) Remove clips from both sides of front bumper.

NOTE:
When removing, push the pin at the center of clip with a thin screwdriver.

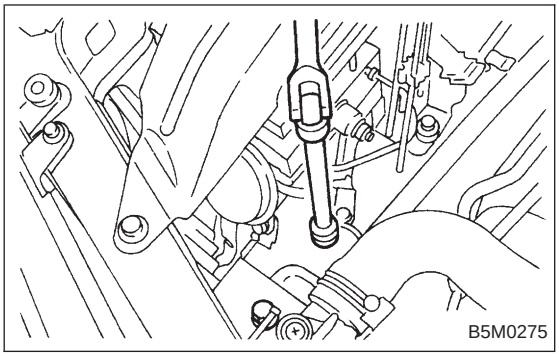

9) Remove bolts (engine compartment side) from bumper stays.

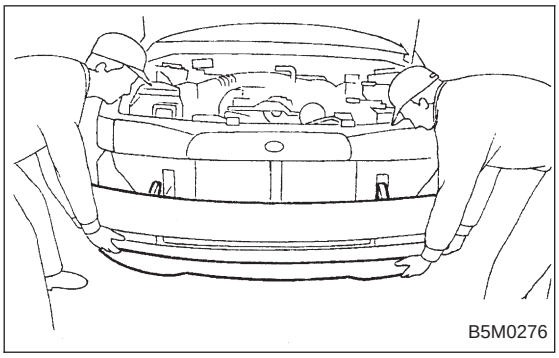

10) Remove front bumper assembly.

NOTE:
Front bumper surface is accessible for removal after removing the following parts:
Two bolts (on the lower center of bumper), mud guard, bolts (on the side of bumper), front grille, headlight, clips (on both sides of front bumper), clips (on the upper section of bumper), and clips (on the lower section of bumper).

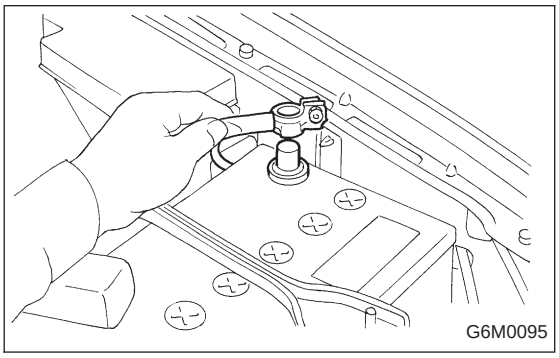

2. OUTBACK WITH STEP ROOF

1) Disconnect the ground cable from the battery.

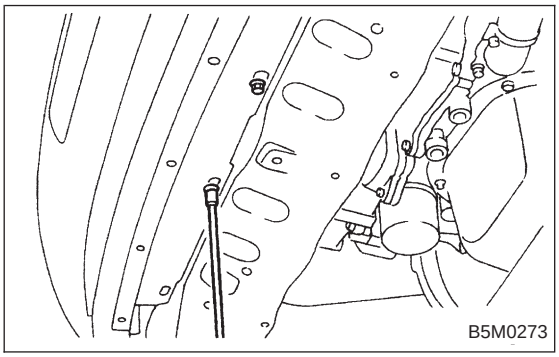

2) Remove two bolts from lower center of bumper.
3) Remove mud guard. <Ref. to 5-1 [W9A1].>

NOTE:
It is not necessary to remove the entire mud guard. Remove clips from the front section of mud guard, if necessary.

4) Remove the canister. <Ref. to 2-1 [W3A0].>

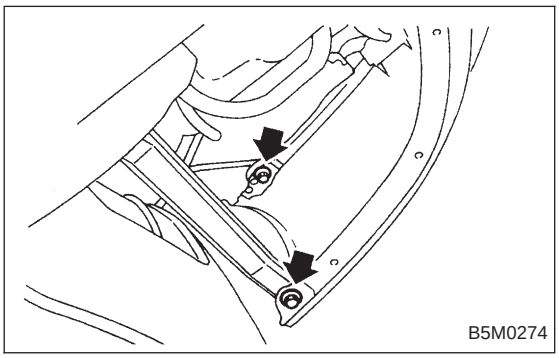

5) Remove two bolts from side of bumper.
6) Remove front grill. <Ref. to 5-1 [W12A0].>
7) Remove headlight. <Ref. to 6-2 [W4B2].>

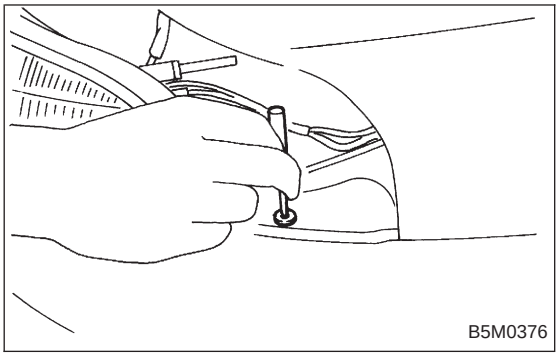

8) Remove fog lamps.
9) Remove clips from both sides of front bumper.

NOTE:
When removing, push the pin at the center of clip with a thin screwdriver.

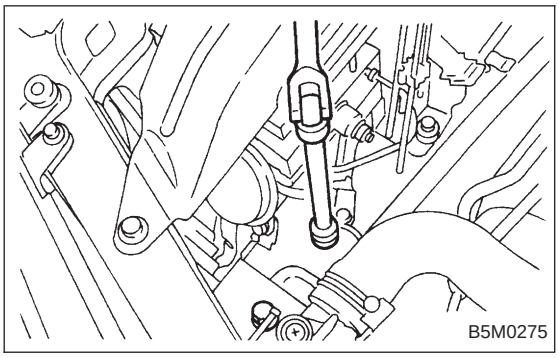

10) Remove bolts (engine compartment side) from bumper stays.

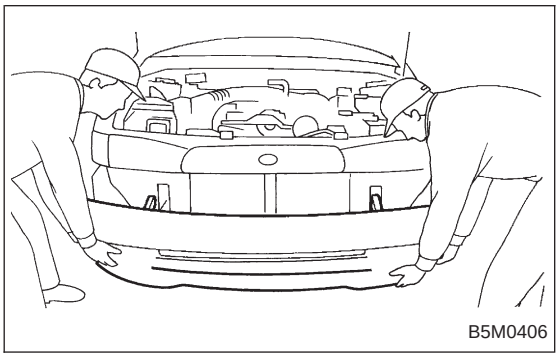

11) Remove front bumper assembly.

NOTE:
Front bumper surface is accessible for removal after removing the following parts:
Two bolts (on the lower center of bumper), mud guard, bolts (on the side of bumper), front grille, headlight, clips (on both sides of front bumper), clips (on the upper section of bumper), and clips (on the lower section of bumper).

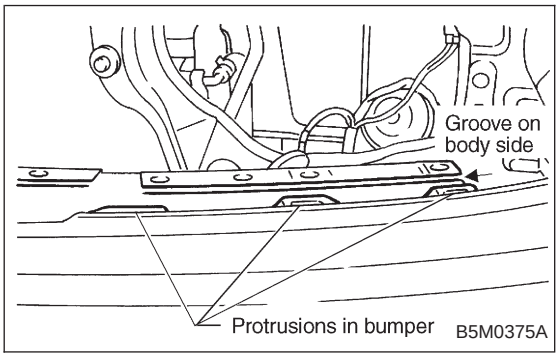

B: INSTALLATION

1. EXCEPT OUTBACK WITH STEP ROOF

To install the front bumper, reverse the above removal procedures.

CAUTION:

- **Be extremely careful to prevent scratches on bumper face as it is made of resin.**
- **Be careful not to scratch the body when removing or installing the bumper.**
- **When installing canister, insert air vent hose of canister into the hole on body.**
- **To facilitate installation of front bumper, insert the protrusion inside bumper into the groove of body.**

2. OUTBACK WITH STEP ROOF

To install the front bumper, reverse the above removal procedures.

CAUTION:

- **Be extremely careful to prevent scratches on bumper face as it is made of resin.**
- **Be careful not to scratch the body when removing or installing the bumper.**
- **When installing canister, insert air vent hose of canister into the hole on body.**

5. Rear Bumper

A: REMOVAL

1. SEDAN

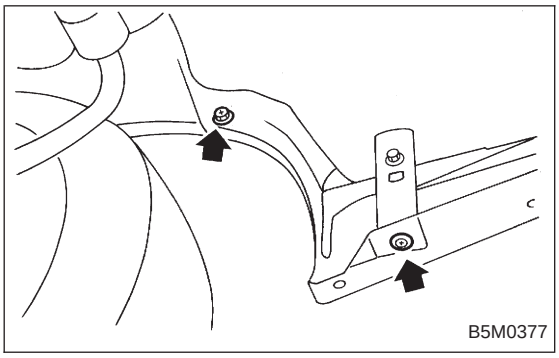

1) Remove one bolt and one clip from side of bumper.
2) Open trunk lid. Remove trunk trim panel clips and detach trim.

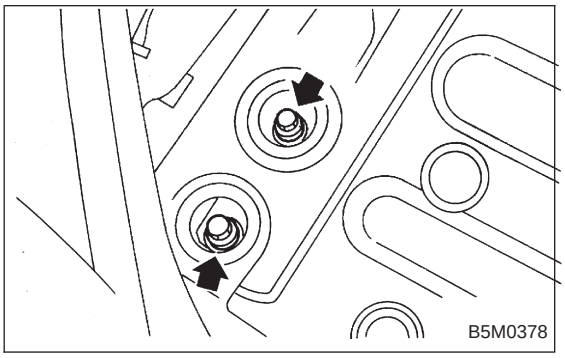

3) Remove rear bumper beam (upper) attaching nut.
4) Remove bolts from bumper stays.

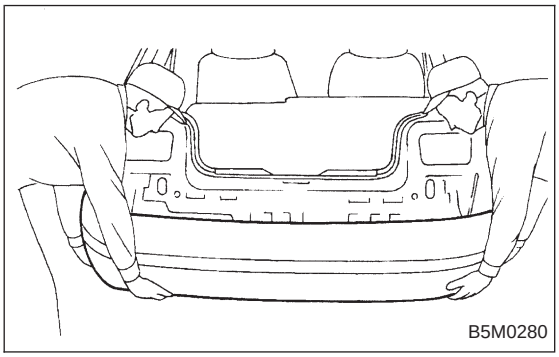

5) Remove rear bumper assembly.

2. WAGON

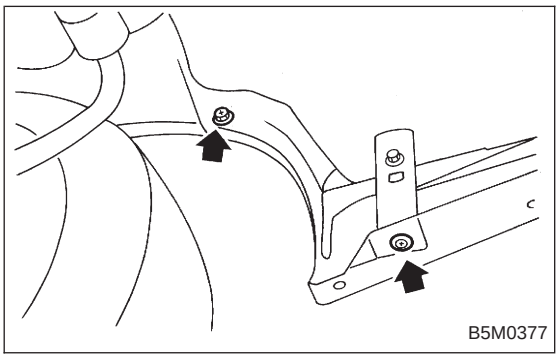

1) Remove one bolt and one clip from side of bumper.
2) Open rear gate. Remove rear quarter trim lid.