8. Front Fender AIRBAG

A: REMOVAL

SUPPLEMENTAL RESTRAINT SYSTEM “AIRBAG”

Airbag system wiring harness is routed near the front fender.

CAUTION:

- **All Airbag system wiring harness and connectors are colored yellow. Do not use electrical test equipment on these circuits.**
- **Be careful not to damage Airbag system wiring harness when servicing the front fender.**

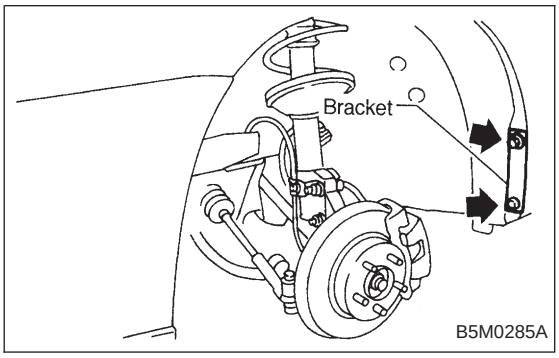

1) Disconnect ground cable from battery.
2) Remove bracket which secures mud guard to front fender.
3) Remove mud guard. <Ref. to 5-1 [W9A1].>

NOTE:
Do not remove the entire mud guard, only the front section of it.

4) Remove headlight. <Ref. to 6-2 [W4B2].>

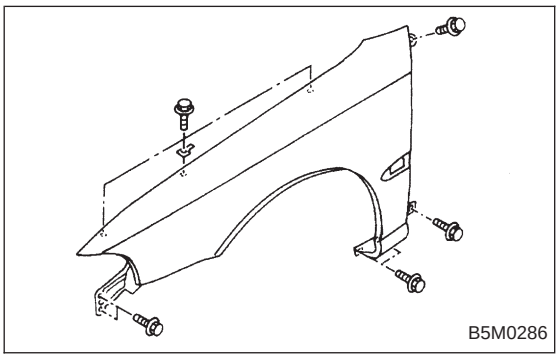

5) Remove bolts which secure front fender.
Remove front fender.

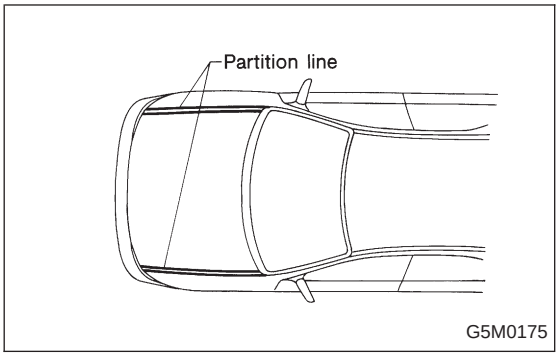

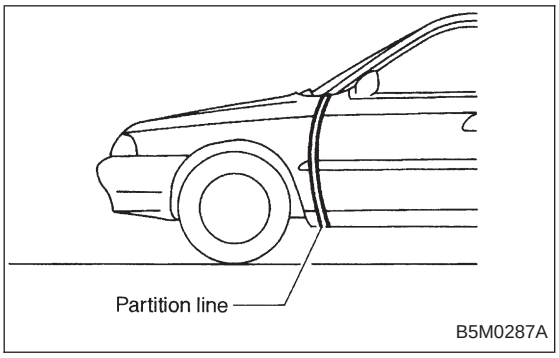

B: INSTALLATION

1) Installation is in the reverse order of removal.
2) Check for alignment of front fender with hood and front door with front fender at all points. Adjust, if necessary.

9. Mud Guard and Rear Arch Protector AIRBAG

A: REMOVAL

SUPPLEMENTAL RESTRAINT SYSTEM "AIRBAG"

Airbag system wiring harness is routed near the mud guard.

CAUTION:

- **All Airbag system wiring harness and connectors are colored yellow. Do not use electrical test equipment on these circuits.**
- **Be careful not to damage Airbag system wiring harness when servicing the mud guard.**

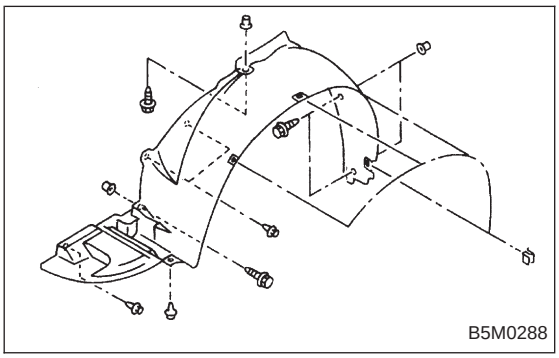

1. MUD GUARD (EXCEPT OUTBACK WITH STEP ROOF)

1) Jack-up vehicle to remove tire.
2) Remove screws and clips. Move mud guard toward the center of the body and remove mud guard.