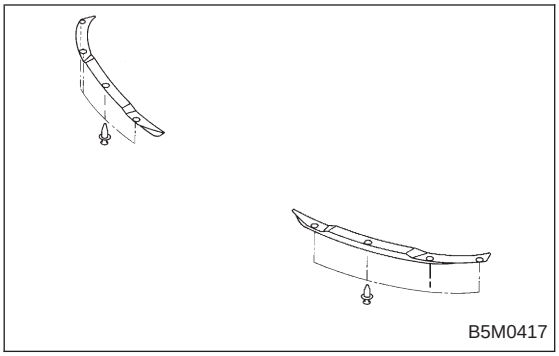

22. Front Under Spoiler (All models except 2500 cc GT)

A: REMOVAL AND INSTALLATION

1) Remove clips.
2) Installation is in the reverse order of removal.

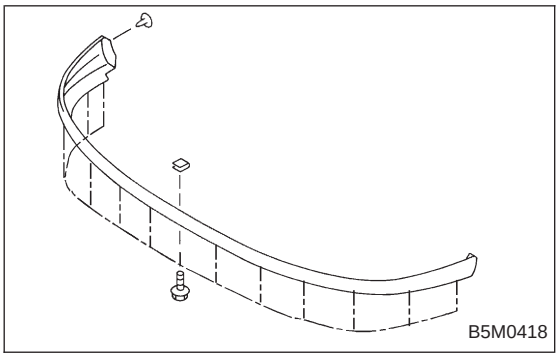

23. Airdam Skirt (2500 cc GT model only)

A: REMOVAL AND INSTALLATION

1) Remove airdam skirt mounting bolts and clips.
2) Installation is in the reverse order of removal.

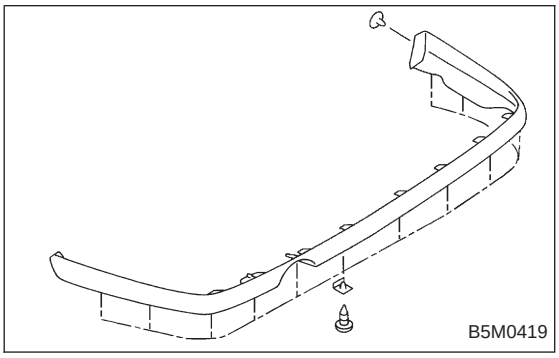

24. Rear Under Spoiler (2500 cc GT model only)

A: REMOVAL AND INSTALLATION

1) Remove tapping screws and clips.
2) Installation is in the reverse order of removal.

NOTE:
- 12 tapping screws are used for 4 Door Sedan.
- 14 tapping screws are used for Station Wagon.