1. Hood

The hood lock has a dual locking design which consists of a main lock and a safety lock mechanism. When the release knob located at the front pillar on the driver's side is pulled back, the main lock is released through the cable attached to the knob.
The safety lock can be released by pushing the lever protruding above the front grill while opening the hood.

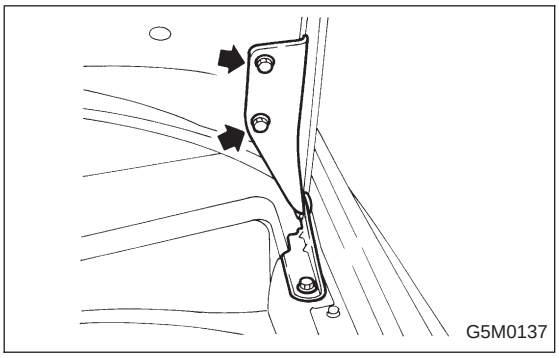

A: REMOVAL

1. HOOD

1) Open front hood, and remove washer hose.
2) Remove attaching bolts.
3) Detach front hood from hinges.

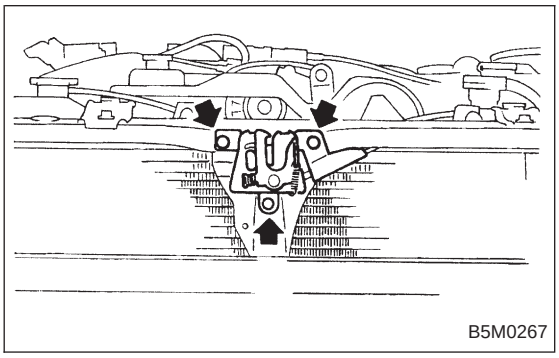

2. HOOD LOCK

1) Open front hood and remove front grille.
2) Remove bolts which secure lock assembly to radiator panel, and remove lock assembly.
3) Disconnect release cable from lock assembly.

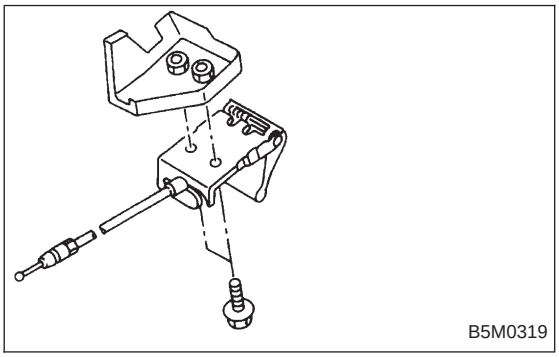

3. RELEASE CABLE

1) Remove front grille.
2) Remove release cable from opener lever in passenger compartment.
3) Remove release cable from lock assembly.
4) Remove cable clip from engine compartment.

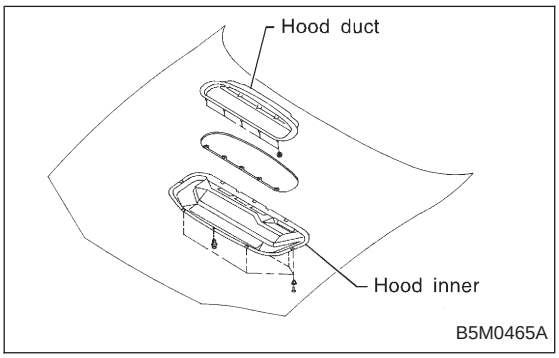

4. HOOD DUCT

1) Open front hood.
2) Remove attaching tapping screws and screw rivet, then remove hood inner.
3) Remove attaching nuts, then remove hood duct.

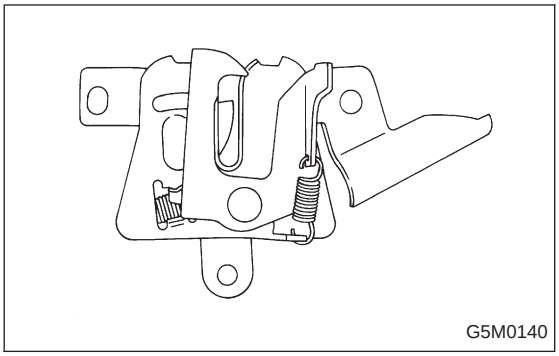

B: POINTS TO CHECK

1) Check striker for bending or abnormal wear.
2) Check safety lever for improper movement.
3) Check other levers and spring for rust formation and unsmooth movement.

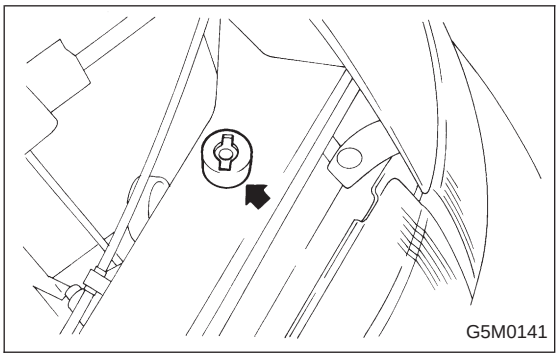

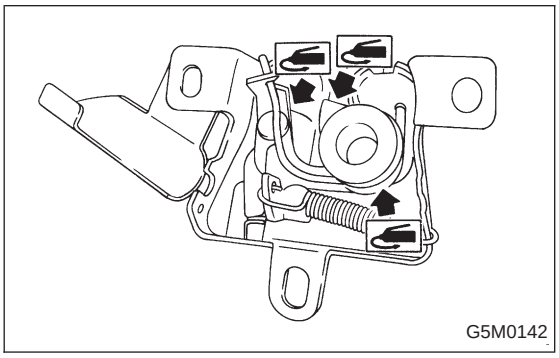

C: INSTALLATION

Installation is in the reverse order of removal.

CAUTION:
With buffer protruding about 18 mm (0.71 in) beyond radiator panel, make sure that:
- **No clearance exists between buffer and inner hood.**
- **Hood main lock is applied when hood is released at a height of approximately 10 cm (3.94 in) above the closed position.**

NOTE:
- Align the center of striker with lock during installation. Make sure safety lever is properly caught by striker under the hood's own weight.
- Route hood lock release cable and hold with clips.
- After installing release cable, ensure it operates smoothly.
- Apply grease to sliding surfaces of parts.

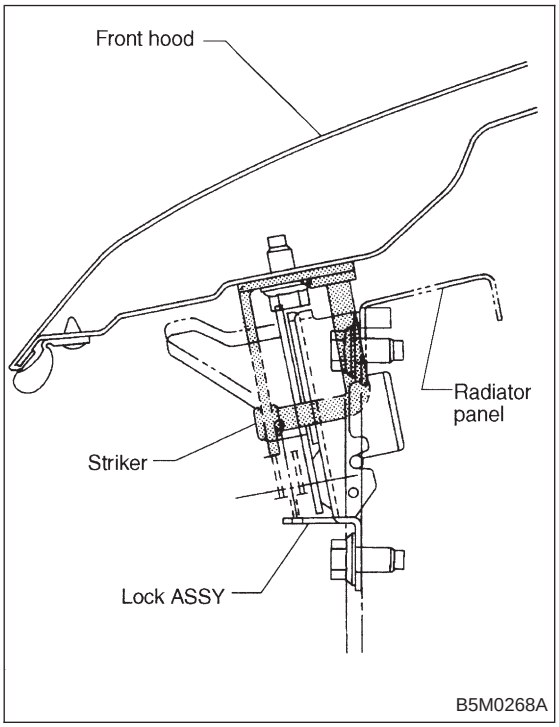

D: ADJUSTMENT

1) Fore-aft and left-right adjustments
Loosen striker mounting bolts and adjust fore-and-aft position of striker.

CAUTION:
Do not adjust striker position using the lock. Doing so may result in a misaligned front grille.

2) Up-down adjustment
Make up-and-down adjustment of striker only when hood does not properly contact buffer or hood is not flush with fender, or when release cable does not properly operate. Adjustment can be made by adjusting the stroke length of striker after lock assembly mounting screws are removed.