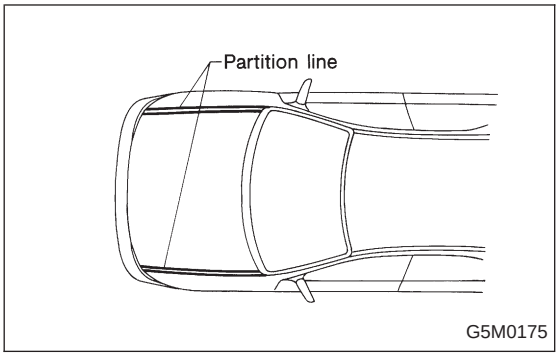


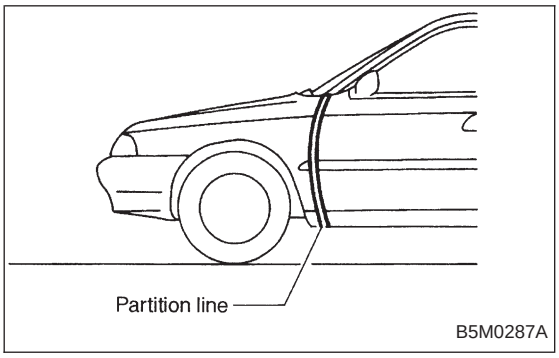


## B: INSTALLATION

1) Installation is in the reverse order of removal.
2) Check for alignment of front fender with hood and front door with front fender at all points. Adjust, if necessary.

# 9. Mud Guard and Rear Arch Protector AIRBAG

## A: REMOVAL

**SUPPLEMENTAL RESTRAINT SYSTEM "AIRBAG"**

Airbag system wiring harness is routed near the mud guard.

**CAUTION:**

- **All Airbag system wiring harness and connectors are colored yellow. Do not use electrical test equipment on these circuits.**
- **Be careful not to damage Airbag system wiring harness when servicing the mud guard.**

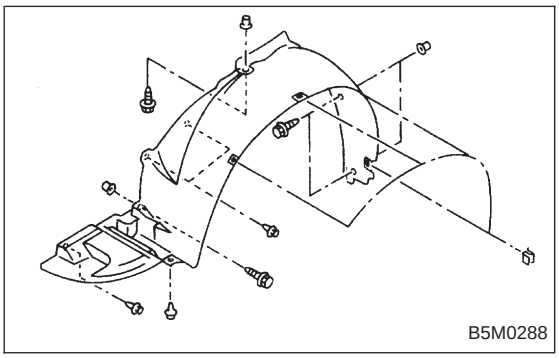


**1. MUD GUARD (EXCEPT OUTBACK WITH STEP ROOF)**

1) Jack-up vehicle to remove tire.
2) Remove screws and clips. Move mud guard toward the center of the body and remove mud guard.

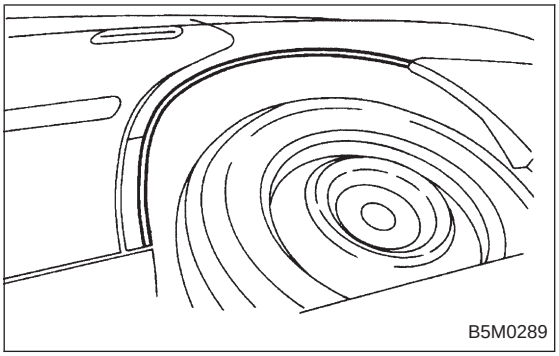


**2. REAR ARCH PROTECTOR**

Remove rear arch protector.

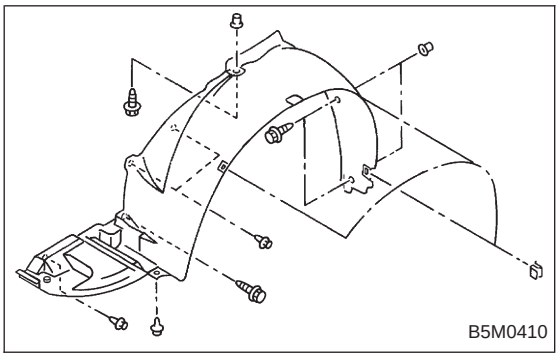


**3. MUD GUARD (OUTBACK WITH STEP ROOF)**

1) Jack-up vehicle to remove tire.
2) Remove screws and clips. Move mud guard toward the center of the body and remove mud guard.

## B: INSTALLATION

Installation is in the reverse order of removal.

**CAUTION:**
**Only use new screws and clips.**

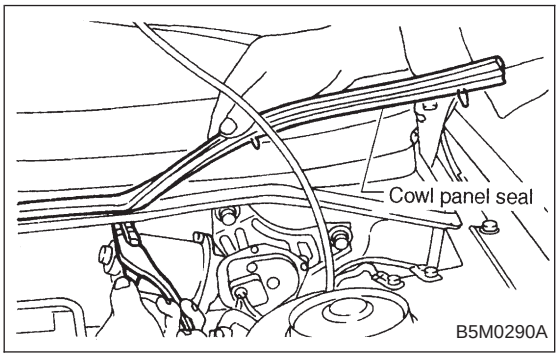


# 10. Cowl Panel

## A: REMOVAL

1) Remove wiper arms.
2) Open front hood.
3) Remove cowl panel seal using a plier.

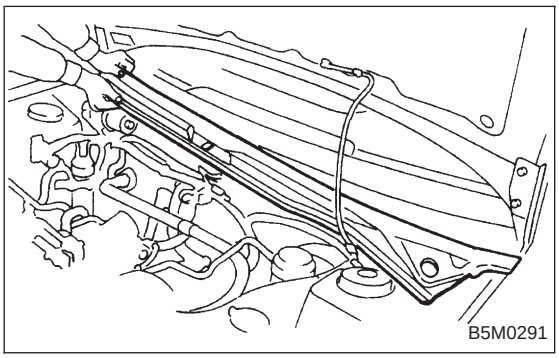


4) Lift cowl panel and detach it from clips attached to body panel.