2. OUTBACK WITH STEP ROOF

To install the front bumper, reverse the above removal procedures.

CAUTION:

- **Be extremely careful to prevent scratches on bumper face as it is made of resin.**
- **Be careful not to scratch the body when removing or installing the bumper.**
- **When installing canister, insert air vent hose of canister into the hole on body.**

5. Rear Bumper

A: REMOVAL

1. SEDAN

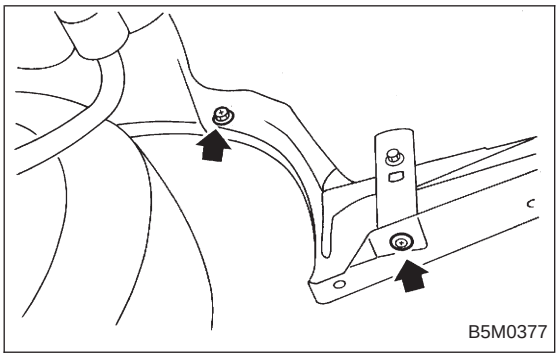

1) Remove one bolt and one clip from side of bumper.
2) Open trunk lid. Remove trunk trim panel clips and detach trim.

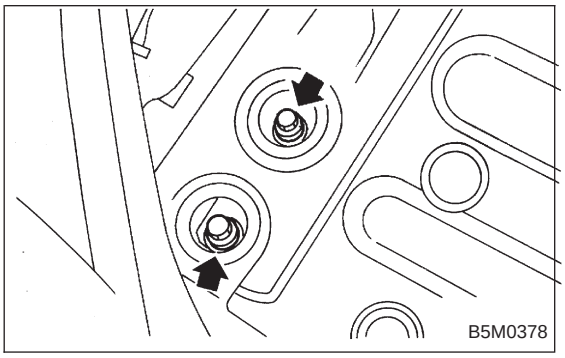

3) Remove rear bumper beam (upper) attaching nut.
4) Remove bolts from bumper stays.

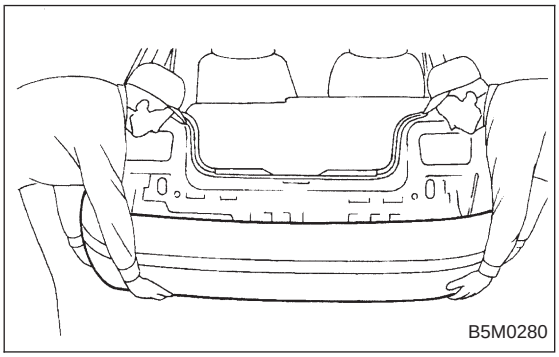

5) Remove rear bumper assembly.

2. WAGON

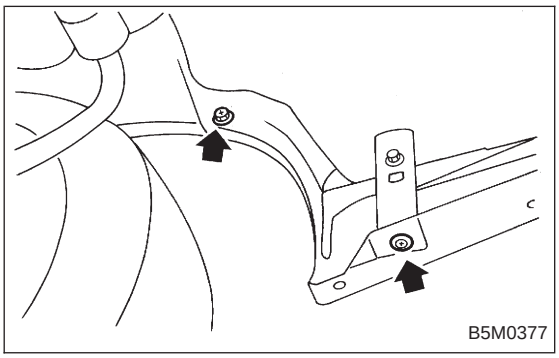

1) Remove one bolt and one clip from side of bumper.
2) Open rear gate. Remove rear quarter trim lid.

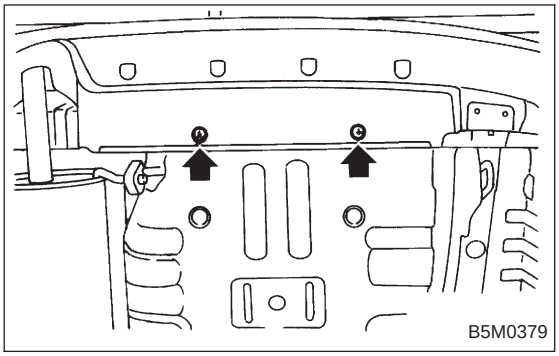

3) Remove two clips from lower center of bumper.

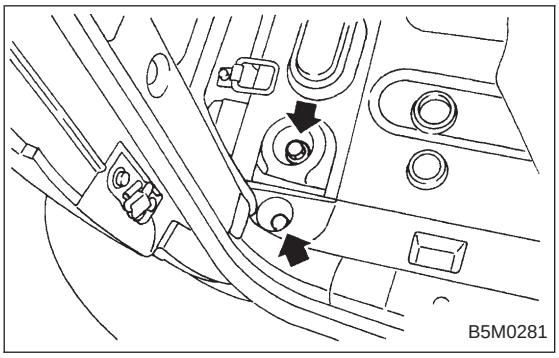

4) Remove bolts from bumper stays.

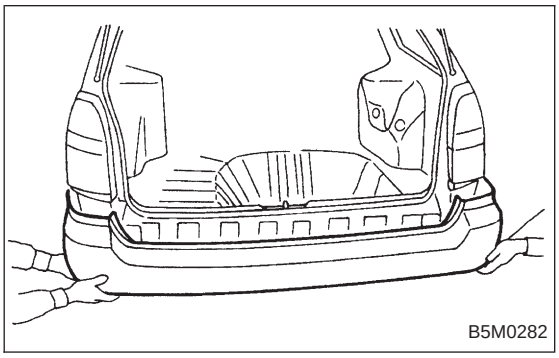

5) Remove rear bumper assembly.

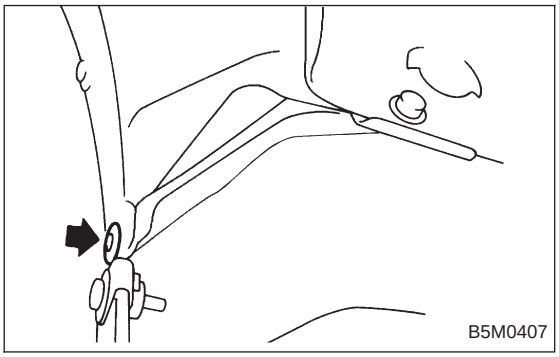

3. OUTBACK WITH STEP ROOF

1) Remove one clip from side of bumper.
2) Open rear gate and remove rear quarter trim lid.

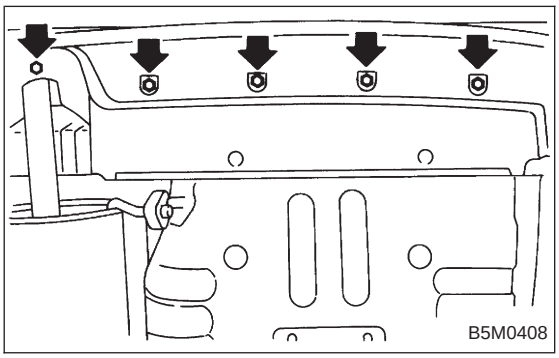

3) Remove five bolts from lower center of bumper.

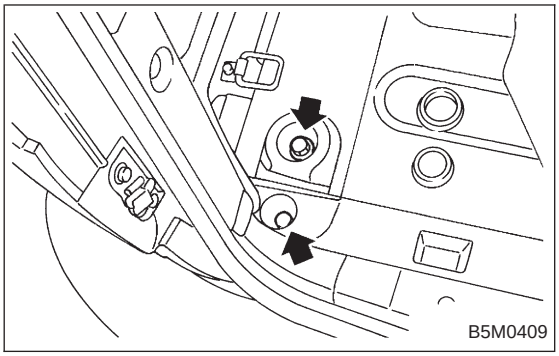

4) Remove bolts from bumper stays.

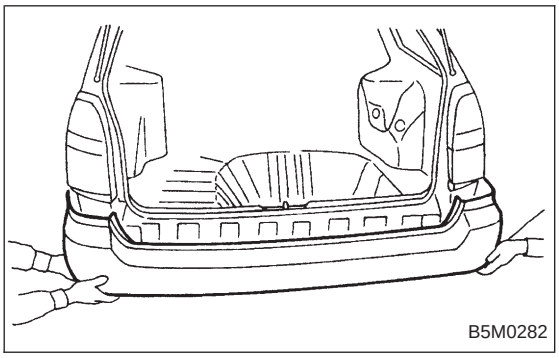

5) Remove rear bumper assembly.

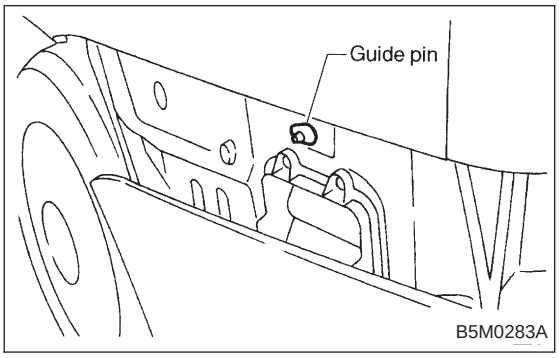

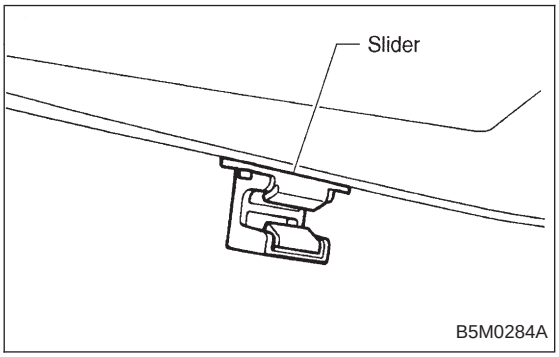

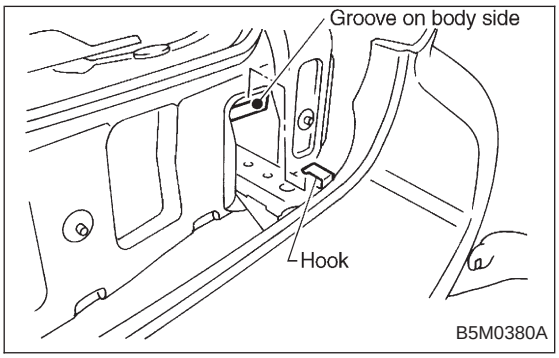

B: INSTALLATION

1. EXCEPT OUTBACK WITH STEP ROOF

To install the rear bumper, reverse the above removal procedures.

CAUTION:

- **Be extremely careful to prevent scratches on bumper face as it is made of resin.**
- **Be careful not to scratch the body when removing or installing bumper.**
- **To facilitate installation of rear bumper, attach slider to the guide pin.**
- **To facilitate installation of rear bumper, insert the bumper hook into the body groove.**

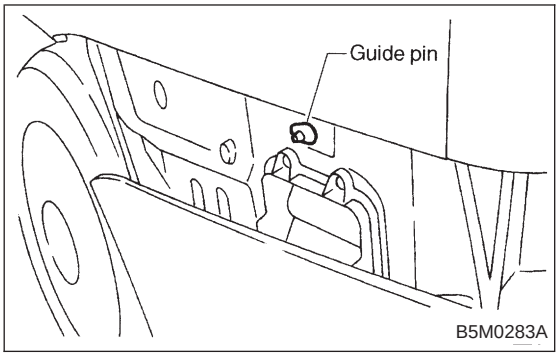

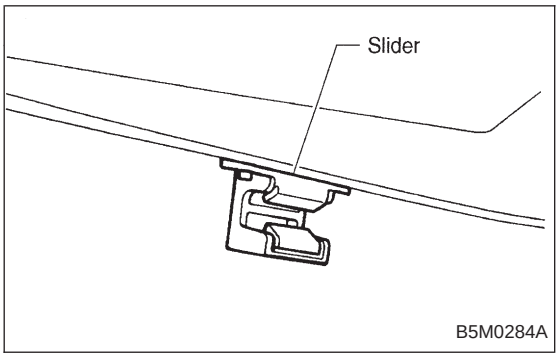

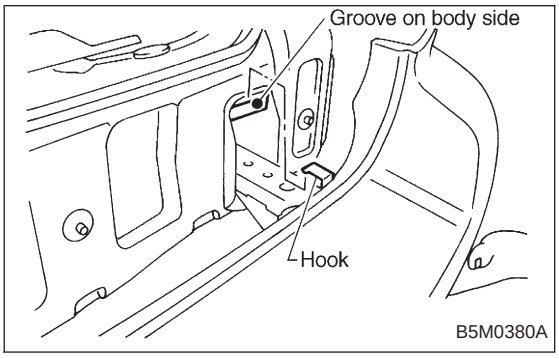

2. OUTBACK WITH STEP ROOF

To install the rear bumper, reverse the above removal procedures.

CAUTION:

- **Be extremely careful to prevent scratches on bumper face as it is made of resin.**
- **Be careful not to scratch the body when removing or installing bumper.**
- **To facilitate installation of rear bumper, attach slider to the guide pin.**
- **To facilitate installation of rear bumper, insert the bumper hook into the body groove.**