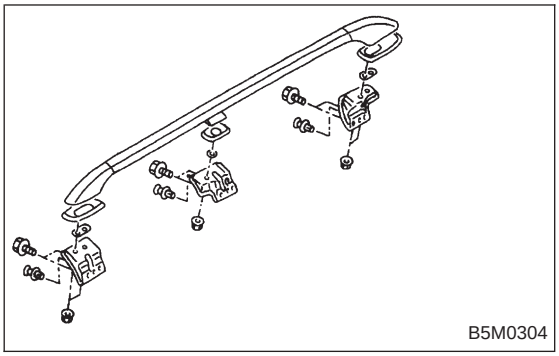

15. Roof Rack (Wagon only, if equipped)

A: REMOVAL

1) Remove roof trim, rear quarter trim, pillar trim, etc. <Ref. to 5-3 [W5A0].>
2) Remove flange bolts.
3) Remove flange nuts.
4) Remove roof rail.

B: INSTALLATION

Installation is in the reverse order of removal.

CAUTION:
To prevent deformation, be sure to install roof rail in steps 4), 3), 2) and 1), in that order.

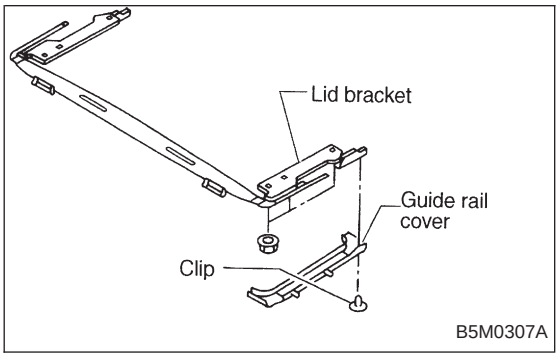

16. Sunroof

A: REMOVAL

1. GLASS LID ASSEMBLY

1) Completely open sun shade. (Push it back far.)
2) Remove a clip and detach guide rail cover.
3) Remove six nuts from the left and right lid bracket.
4) Working inside, slightly raise glass lid assembly until it is disengaged from lid bracket.
5) Hold both ends of glass lid assembly and remove it at an angle.

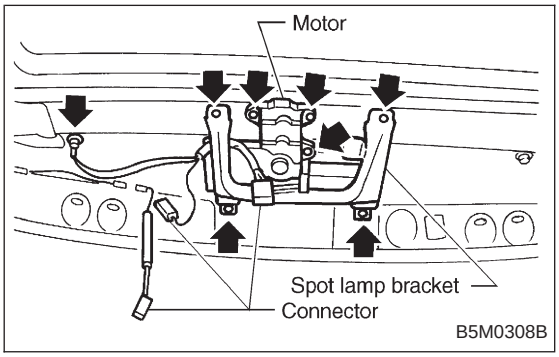

2. SUNROOF MOTOR AND RELAY

1) Remove center pillar trim upper. <Ref. to 5-3 [W5A3].>
2) Remove front pillar trim upper. <Ref. to 5-3 [W5A4].>
3) Remove assist grip on left side.
4) Remove sunvisor with hook.
5) Remove sunroof switch.
6) Remove rearview mirror.
7) While rolling up roof trim, disconnect harness clips and connector.
8) While rolling up roof trim, remove spot lamp bracket and sunroof motor.