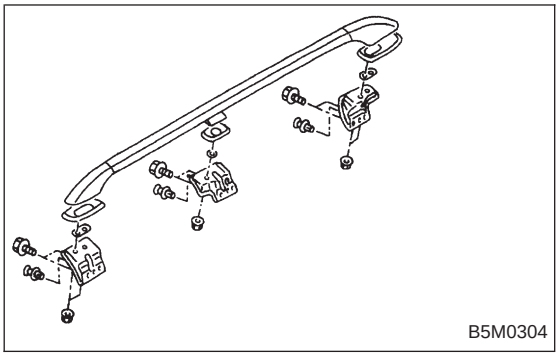


## 17. Roof Rail (Outback with step roof)

### A: REMOVAL

1) Remove roof trim, rear quarter trim, pillar trim, etc. <Ref. to 5-3 [W5A0].>
2) Remove flange bolts.
3) Remove flange nuts.
4) Remove roof rail.

### B: INSTALLATION

Installation is in the reverse order of removal.

**CAUTION:**
**To prevent deformation, be sure to install roof rail in steps 4), 3), 2) and 1), in that order.**

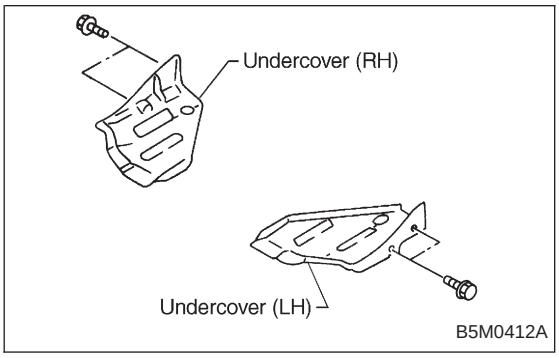


## 18. Undercover

### A: REMOVAL AND INSTALLATION

1) Remove undercover mounting bolts.
2) Installation is in the reverse order of removal.

NOTE:
Undercover is bolted along with mud guard.

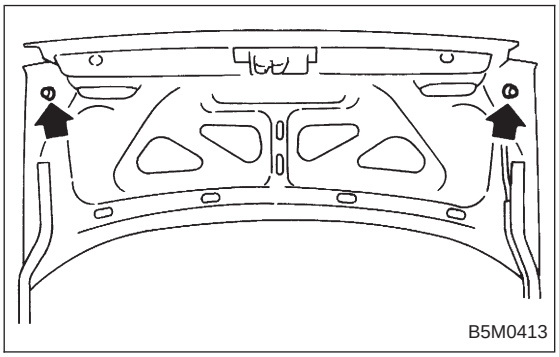


## 19. Rear Spoiler (4 Door Sedan 2500 cc GT model only)

### A: REMOVAL AND INSTALLATION

1) Open trunk lid.
2) Disconnect high-mount stop light connector located inside the trunk lid.
3) Remove rubber caps.

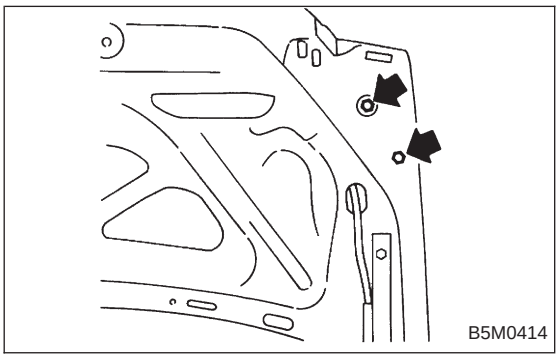


4) Remove rear spoiler mounting nuts.

**CAUTION:**
**When removing nuts, be careful not to drop them inside rear gate.**