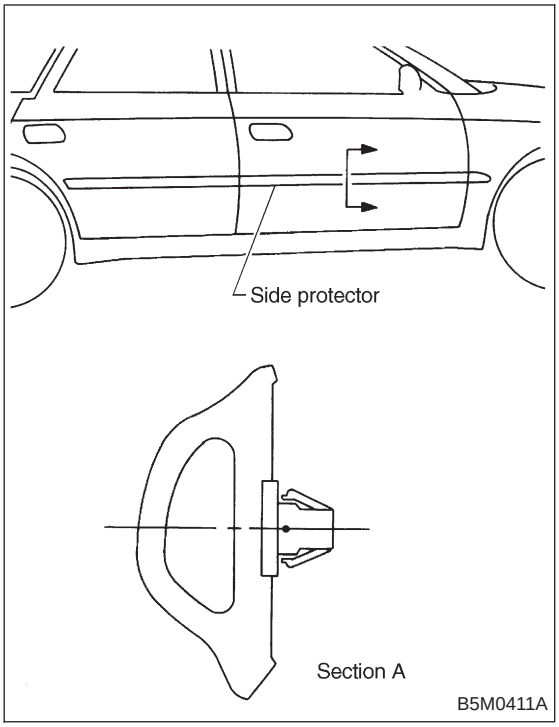

14. Side Protector

A: REMOVAL

Side protector consists of three parts; front fender, front door and rear door.

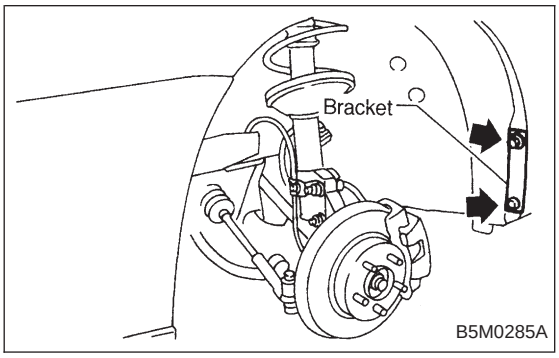

1. SIDE PROTECTOR FRONT FENDER PORTION

1) Remove bracket which secures mud guard to front fender.
2) Remove mud guard. <Ref. to 5-1 [W9A1].>

NOTE:
Detach the rear part of mud guard as required for the procedure. It is not necessary to remove the entire mud guard.
3) Use pliers to remove a clip from inside front fender. Remove it from vehicle body but keep it with side protector.

2. SIDE PROTECTOR FRONT DOOR AND REAR DOOR PORTIONS

1) Remove trim panel. <Ref. to 5-2 [W2A2].>
2) Use pliers to remove clips from inside of doors. Remove them from vehicle body but keep them with side protector.

NOTE:
Front door portion has five clips, rear door portion has four clips.

B: INSTALLATION

Installation is in the reverse order of removal.

NOTE:
To install side protector front door and rear door portions, insert the first clip into the base hole [9 mm (0.35 in) dia.], and then insert other clips.

CAUTION:
Insert clips firmly and carefully by hand. To avoid damaging clips, do not forcefully push or hit clips.