5) Installation is in the reverse order of removal.

Tightening torque:
7.4±2.0 N·m (0.75±0.2 kg-m, 5.4±1.4 ft-lb)

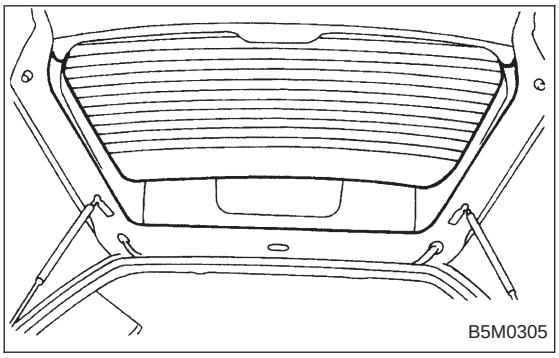

20. Roof Spoiler (Station Wagon 2500 cc GT model only)

A: REMOVAL AND INSTALLATION

1) Open rear gate and remove rear gate trim upper and side.
2) Remove high-mount stop light. <Ref. to 6-2 [W5A4].>

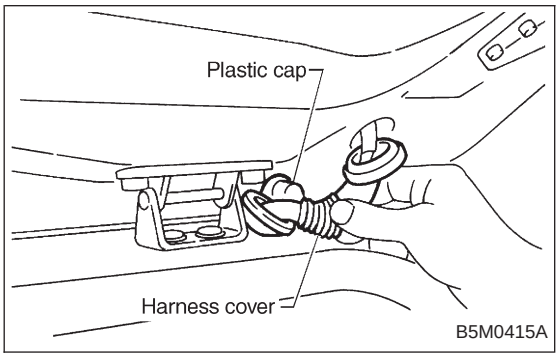

3) Remove plastic caps and harness covers.

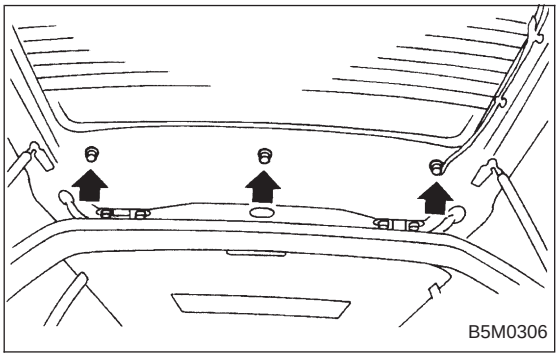

4) Remove roof spoiler mounting nuts.

CAUTION:
- **When removing nuts, be careful not to drop them inside rear gate.**
- **Be careful since two-sided tape is placed between roof spoiler and body panel.**

5) Installation is in the reverse order of removal.

Tightening torque:
7.4±2.0 N·m (0.75±0.2 kg-m, 5.4±1.4 ft-lb)

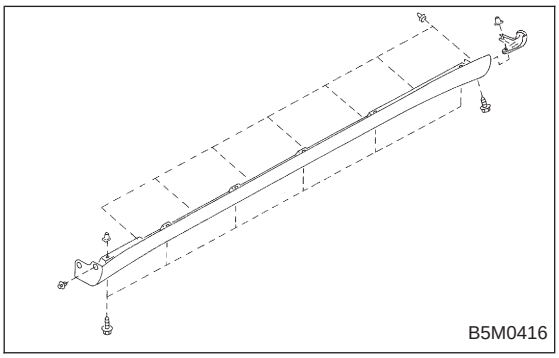

21. Side Spoiler (2500 cc GT model only)

A: REMOVAL AND INSTALLATION

1) Remove tapping screws, clip and end cover.
2) Installation is in the reverse order of removal.