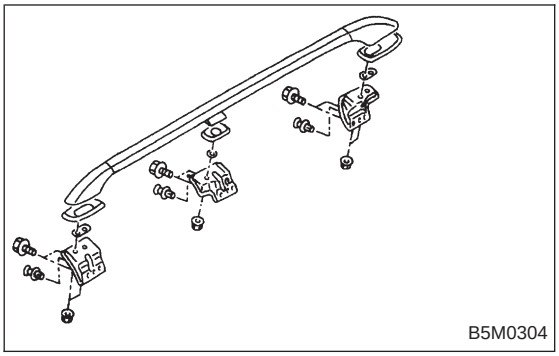


# 15. Roof Rack (Wagon only, if equipped)

## A: REMOVAL

1) Remove roof trim, rear quarter trim, pillar trim, etc. <Ref. to 5-3 [W5A0].>
2) Remove flange bolts.
3) Remove flange nuts.
4) Remove roof rail.

## B: INSTALLATION

Installation is in the reverse order of removal.

**CAUTION:**
**To prevent deformation, be sure to install roof rail in steps 4), 3), 2) and 1), in that order.**

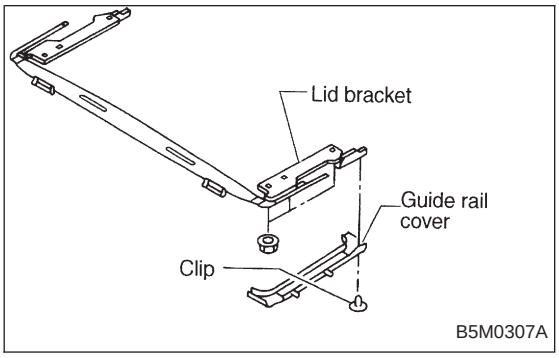


# 16. Sunroof

## A: REMOVAL

### 1. GLASS LID ASSEMBLY

1) Completely open sun shade. (Push it back far.)
2) Remove a clip and detach guide rail cover.
3) Remove six nuts from the left and right lid bracket.
4) Working inside, slightly raise glass lid assembly until it is disengaged from lid bracket.
5) Hold both ends of glass lid assembly and remove it at an angle.

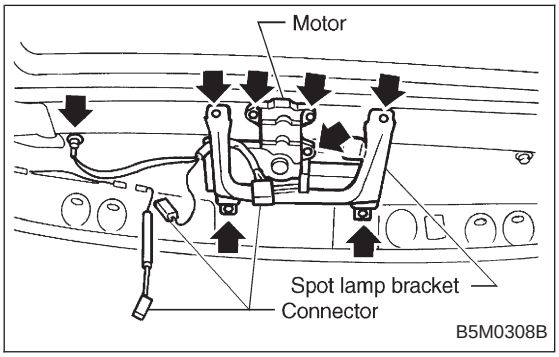


### 2. SUNROOF MOTOR AND RELAY

1) Remove center pillar trim upper. <Ref. to 5-3 [W5A3].>
2) Remove front pillar trim upper. <Ref. to 5-3 [W5A4].>
3) Remove assist grip on left side.
4) Remove sunvisor with hook.
5) Remove sunroof switch.
6) Remove rearview mirror.
7) While rolling up roof trim, disconnect harness clips and connector.
8) While rolling up roof trim, remove spot lamp bracket and sunroof motor.

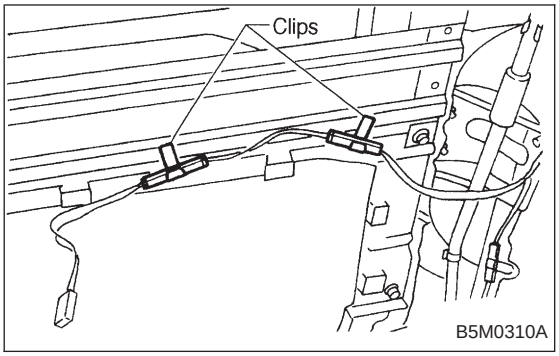


### 3. SUNROOF FRAME

1) Remove sunroof switch, center and rear room lamps.
2) Remove roof trim, rear quarter trim, pillar trim, etc. <Ref. to 5-3 [W5A0].>
3) Remove glass lid assembly.
4) Remove two harness support clips.

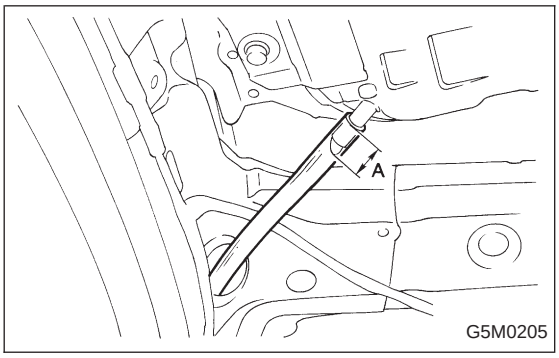


5) Disconnect harness clips and connector of sunroof motor.
6) Disconnect front and rear drain tubes.

**CAUTION:**
**When installing drain tube, insert it securely into drain pipe.**

***Length A:***
***15 mm (0.59 in) or more***

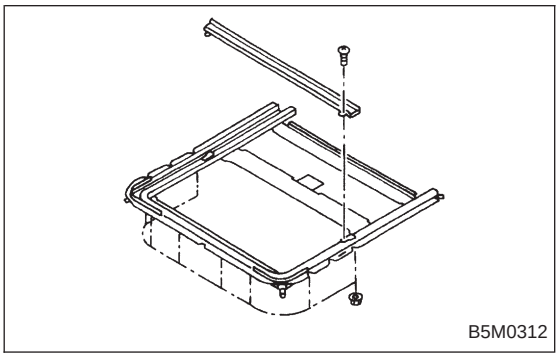


7) Remove eight nuts.

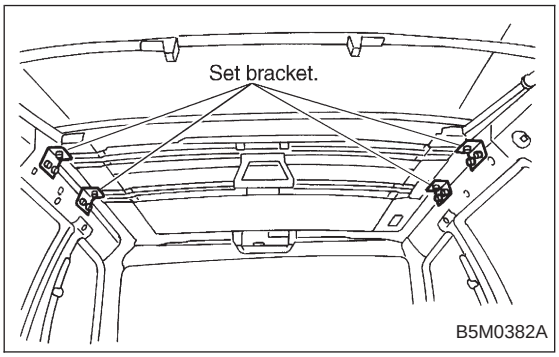


8) Remove set bracket mounting bolts.
9) Remove sunroof frame.

## B: INSTALLATION

Installation is in the reverse order of removal.

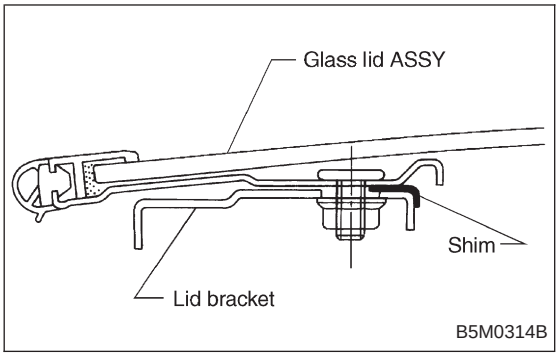


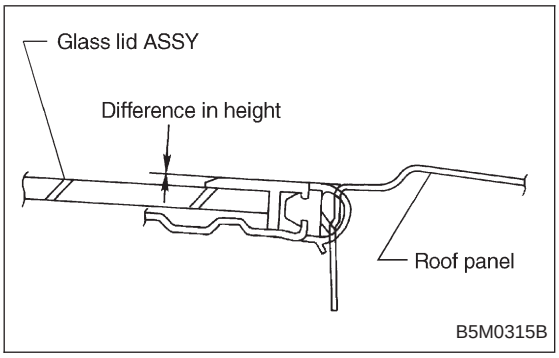


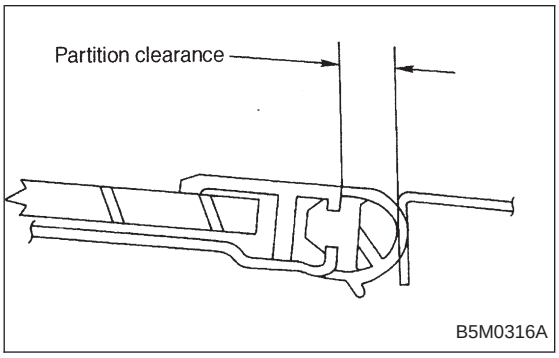


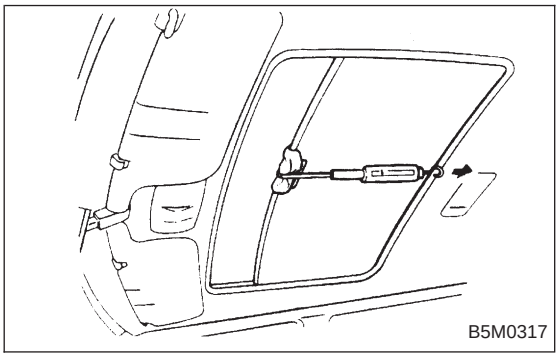


## C: ADJUSTMENTS

### 1. ALIGNMENT OF HEIGHT BETWEEN GLASS LID ASSEMBLY AND ROOF PANEL

1) Remove guide rail cover.
2) Loosen nuts and adjust height by adding (Max: two pieces) and extracting (Max: one piece) shim(s) (Standard: one piece) between glass lid assembly and lid bracket.

***Difference in height between glass lid assembly and roof panel:***
***0±0.5 mm (0±0.020 in)***

### 2. ALIGNMENT OF GLASS LID ASSEMBLY WITH ROOF PANEL

1) Remove guide rail cover.
2) Loosen nuts and move glass lid assembly to either side to adjust front, rear, right, and left side partitions.

***Partition clearance:***
***7.0±0.5 mm (0.276±0.020 in)***

### 3. CHECKING FOR MOVEMENT OF GLASS LID ASSEMBLY ITSELF

1) Before installing sunroof motor, check glass lid assembly for movement.
2) Place a cloth on glass lid assembly and sun shade, and attach a spring scale to glass lid assembly edge using the cloth.
3) Pull spring scale to measure force required to move glass lid assembly.

***Force required to move glass lid assembly and sun shade trim:***
***Less than 196 N (20 kg, 44 lb)***

Considerable effort is required to start glass lid assembly moving, so take scale reading while glass lid assembly is moving smoothly.
4) If force required exceeds specifications, check the following points:
- Glass lid assembly, sun shade and deflector and guide rail assembly for improper installation
- Cable for seizure