2. Console box

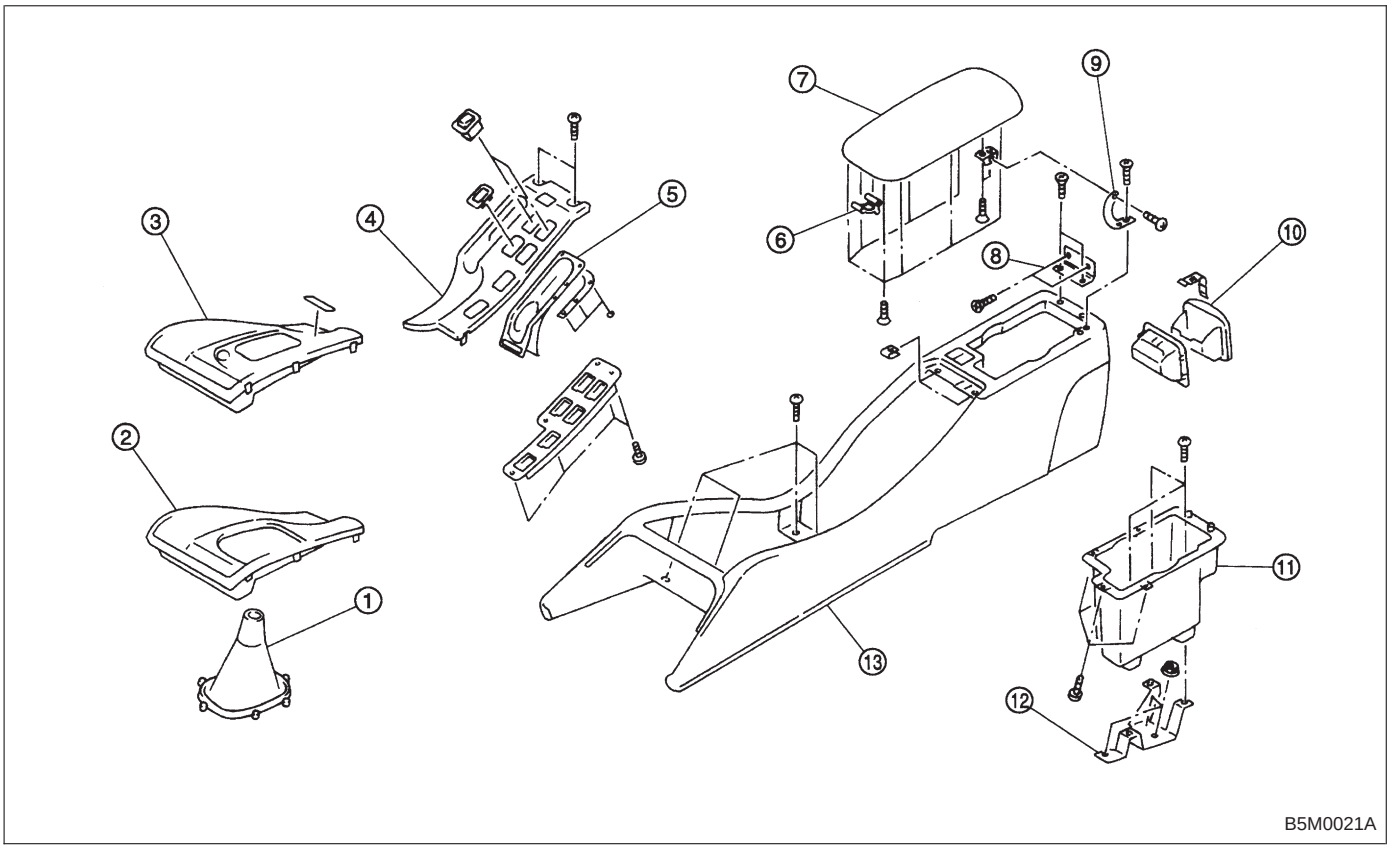

① Shift boot
② Front cover (MT)
③ Front cover (AT)
④ Console cover
⑤ Strip
⑥ Lock
⑦ Lid
⑧ Hinge
⑨ Arm
⑩ Ash tray ASSY
⑪ Console pocket
⑫ Console BRKT
⑬ Console box