1. Instrument Panel

1. LHD MODEL

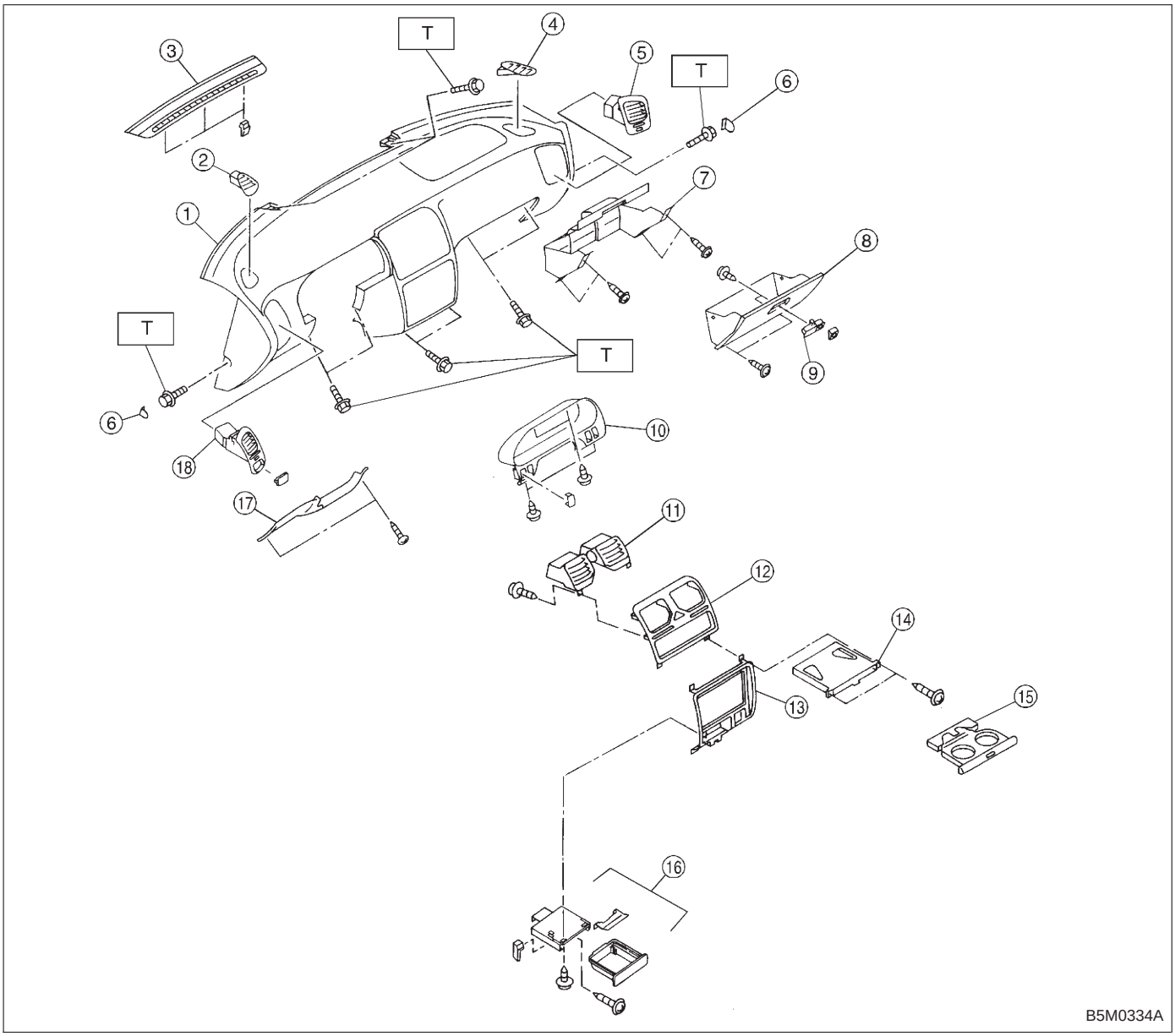

① Pad and frame
② Grille SD def. (D)
③ Front def. grille
④ Grille SD def. (P)
⑤ Grille vent (P)
⑥ Cover
⑦ Cover back panel
⑧ Pocket ASSY
⑨ Lock ASSY
⑩ Meter visor
⑪ Grille CTR vent.
⑫ Panel CTR upper
⑬ Panel CTR lower
⑭ Cup holder BRKT
⑮ Cup holder
⑯ Ash tray ASSY
⑰ Panel lower cover
⑱ Grille SD vent. (D)

Tightening torque: N·m (kg-m, ft-lb)
T: 7±1 (0.7±0.1, 5.1±0.7)

2. RHD MODEL

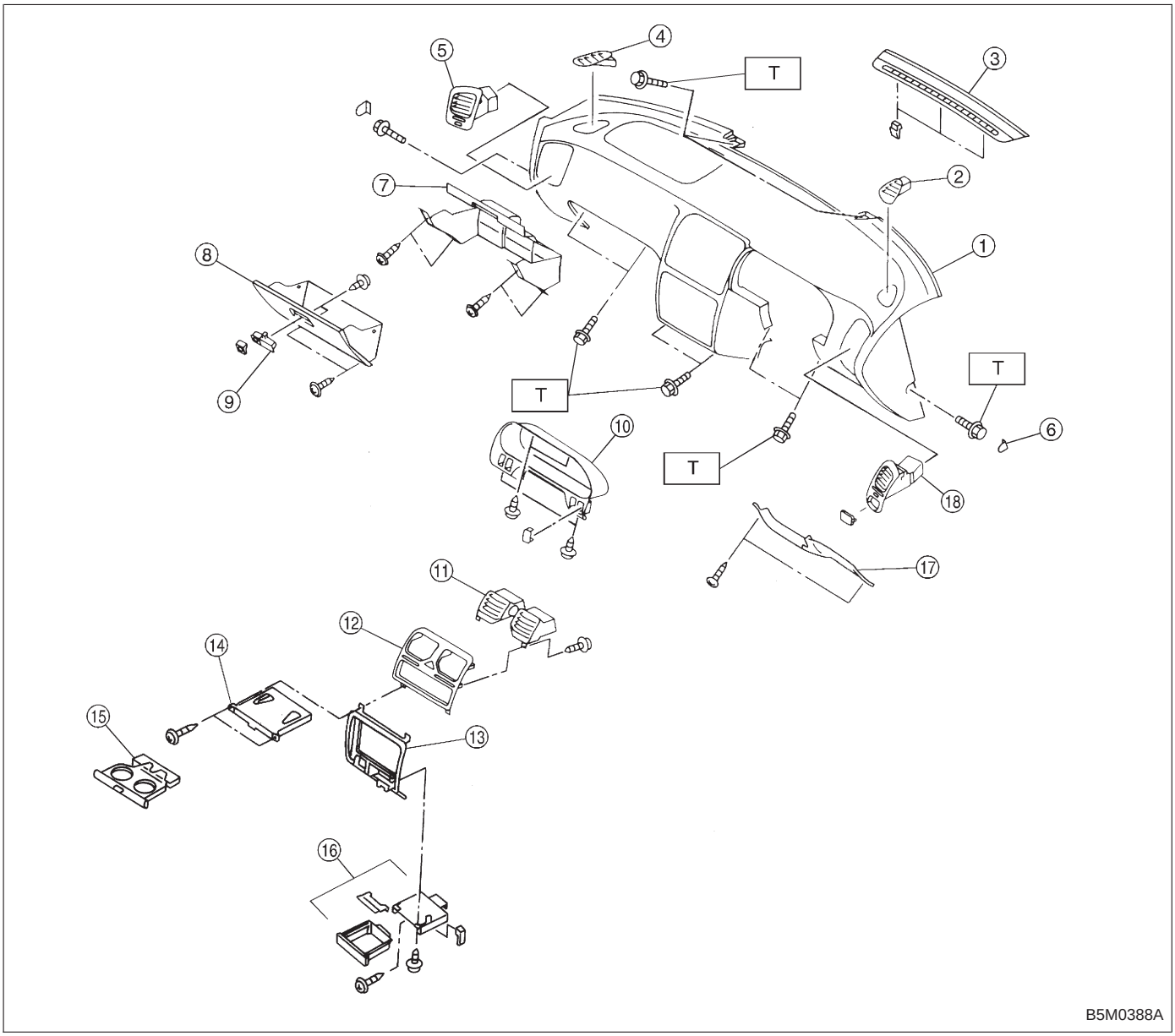

① Pad and frame
② Grille SD def. (D)
③ Front def. grille
④ Grille SD def. (P)
⑤ Grille vent. (P)
⑥ Cover
⑦ Cover back panel
⑧ Pocket ASSY
⑨ Lock ASSY
⑩ Meter visor
⑪ Grille CTR vent.
⑫ Panel CTR upper
⑬ Panel CTR lower
⑭ Cup holder BRKT
⑮ Cup holder
⑯ Ash tray ASSY
⑰ Panel lower cover
⑱ Grille SD vent. (D)

Tightening torque: N·m (kg-m, ft-lb)
T: 7±1 (0.7±0.1, 5.1±0.7)