1. Instrument Panel AIRBAG

Airbag system wiring harness is routed near combination meter.

CAUTION:

- **All Airbag system wiring harness and connectors are colored yellow. Do not use electrical test equipment on these circuits.**
- **Be careful not to damage Airbag system wiring harness when servicing the combination meter.**

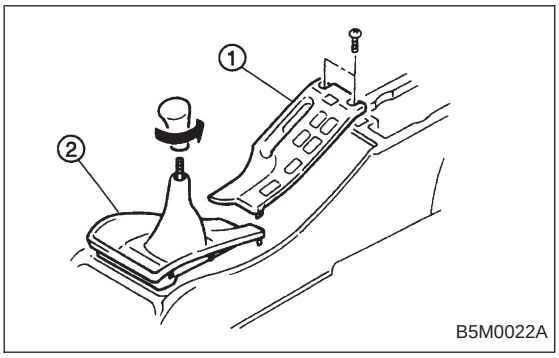

A: REMOVAL

1) Disconnect GND cable from battery.
2) Remove shift knob (MT model).
3) Remove console cover ① and front cover ②.

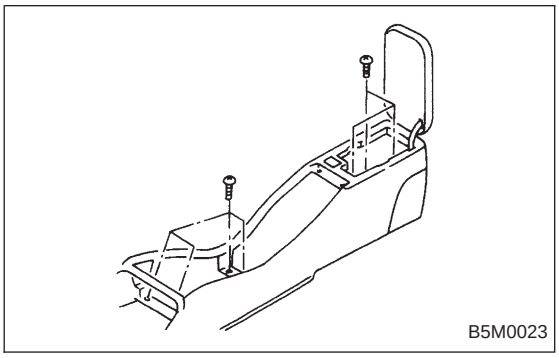

4) Remove console box.

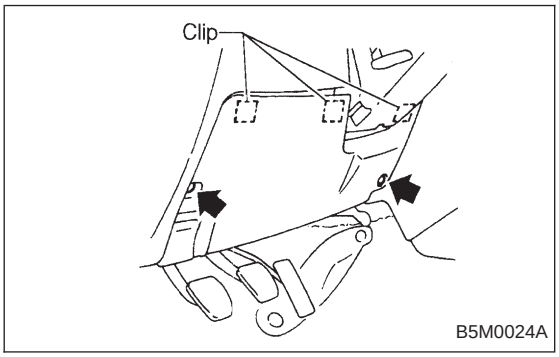

5) Remove lower cover and then disconnect connector.

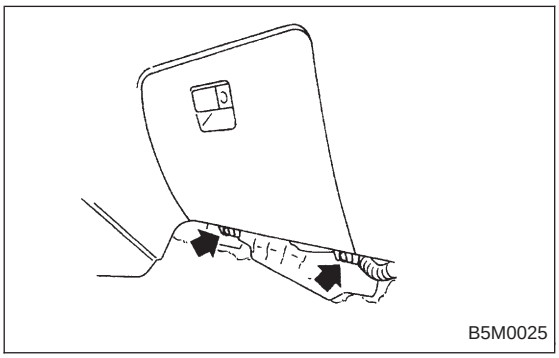

6) Remove glove box.

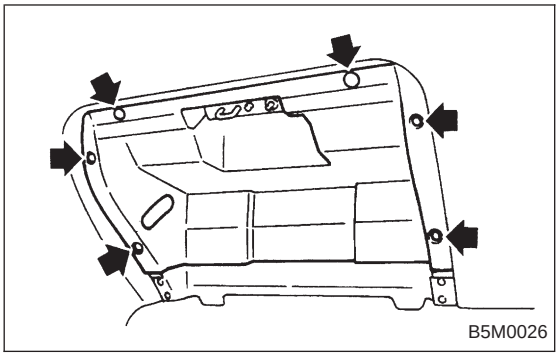

7) Remove cover back panel.

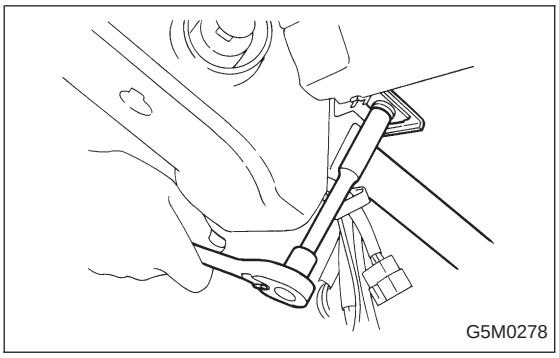

8) Remove two bolts and lower steering column.

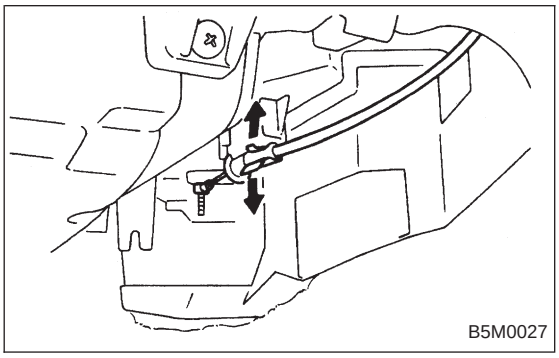

9) Set temperature control lever to Max. COLD position, and then disconnect temperature control cable from link of heater module.

NOTE:
Do not move lever and link when installing.

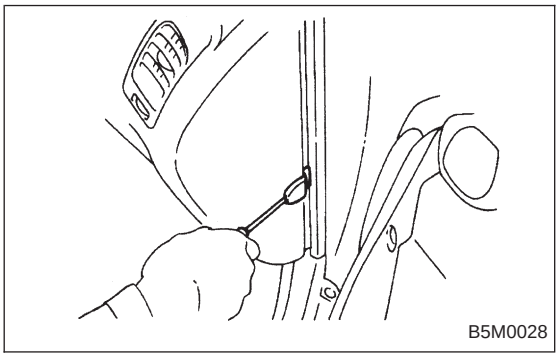

10) Remove bolt cover and bolt of both side.

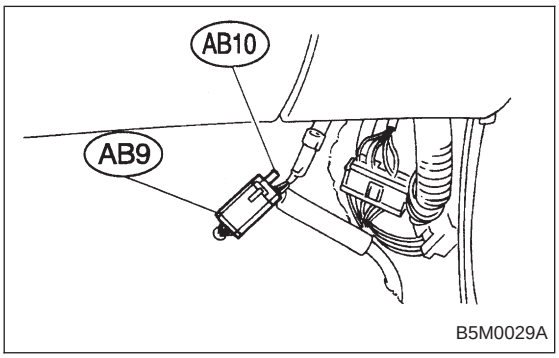

11) Remove front side sill cover RH and then disconnect airbag connector (AB9) and (AB10) (Airbag model). <Ref. to 5-5 [M2-6].>

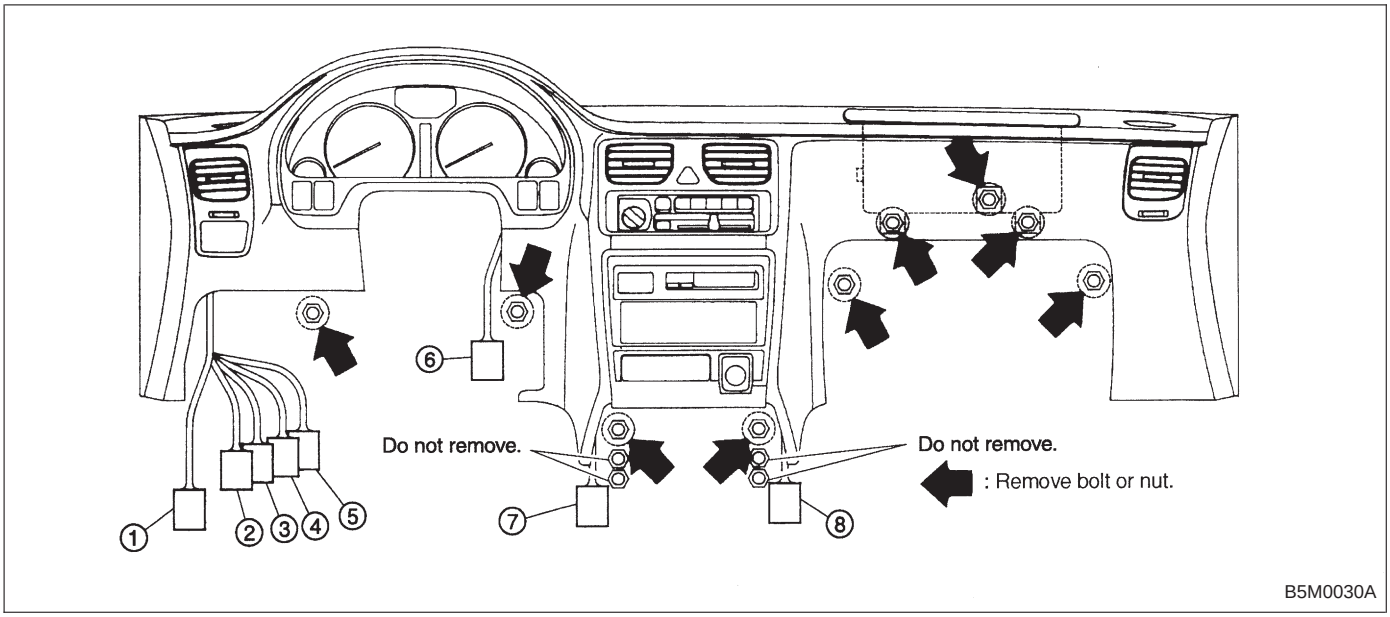

12) Disconnect harness connectors.

①	15P/Gray
②	22P/Brown
③	22P/White
④	20P/Blue
⑤	22P/Black
⑥	4P/Sky blue
⑦	1P/Black
⑧	1P/Black

CAUTION:
Be sure to hold socket section and not harness when disconnecting.

NOTE:
Put matching mark, if necessary, for easy re-assembly.

13) Remove the installing bolt.

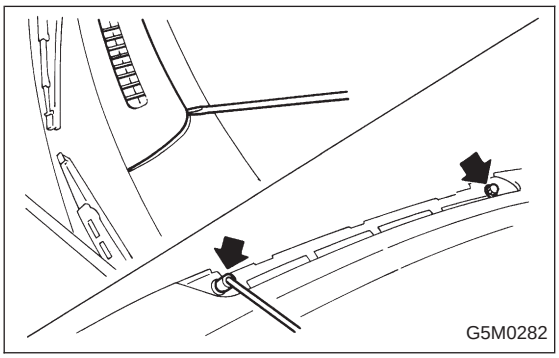

14) Remove front defroster grille and two bolts.
15) Remove instrument panel carefully from the body.

CAUTION:
Take care not to scratch the instrument panel and related parts.

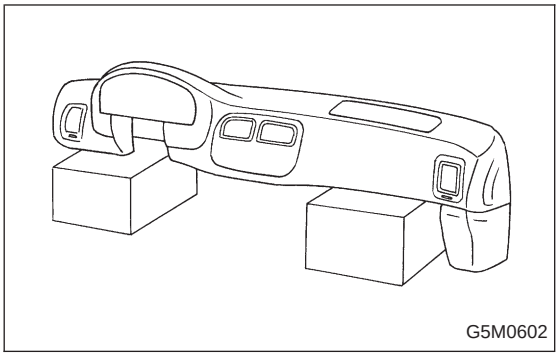

CAUTION:
When storing removed instrument panel with passenger airbag module, place it standing up on the floor.

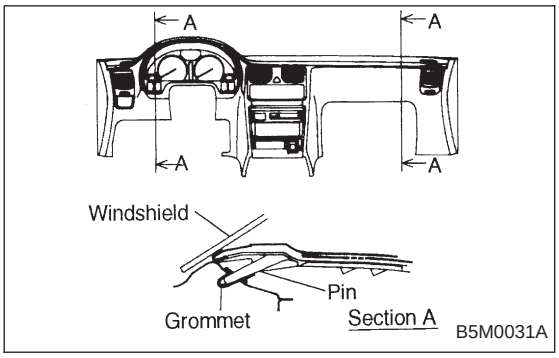

B: INSTALLATION

1) Installation is in the reverse order of removal.
Do the following:
When setting instrument panel into position, push two pins into grommet on body panel.

CAUTION:
- **Be careful not to snag the harness.**
- **Make sure to connect harness connectors.**
- **Take care not to scratch the instrument panel and related parts.**

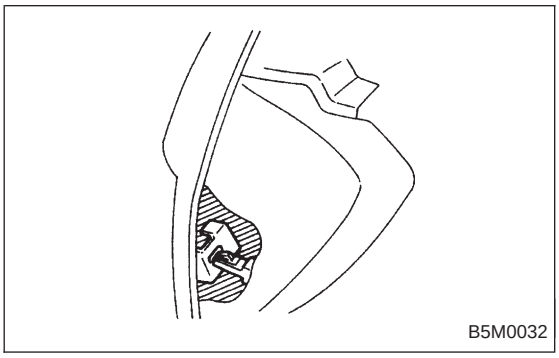

2) Set clips located at both inside ends of instrument panel onto body side.