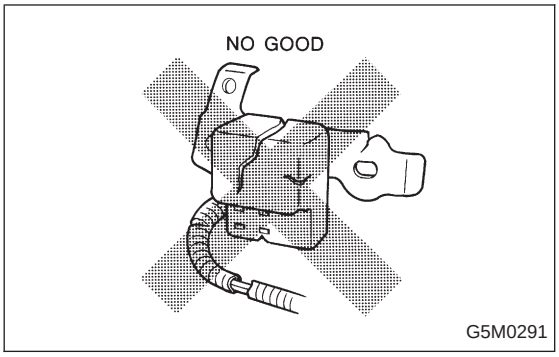

1. Precaution

1) If any of the airbag system parts such as sensors, airbag module, airbag control module and harness are damaged or deformed, replace with new genuine parts.

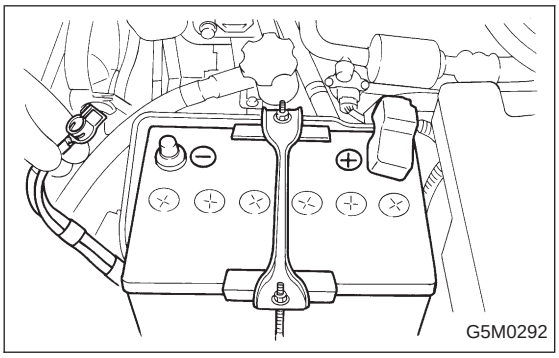

2) When servicing, be sure to turn the ignition switch off, disconnect the negative (−) battery terminal then the positive (+) terminal in advance, and wait for more than 20 seconds before starting work.

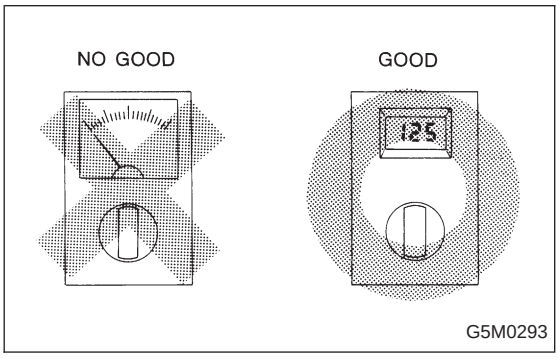

3) When checking the system, be sure to use a digital circuit tester. Use of an analog circuit tester may cause the airbag to activate erroneously. Do not directly apply the tester probe to any connector terminal of the airbag. When checking, use a test harness.

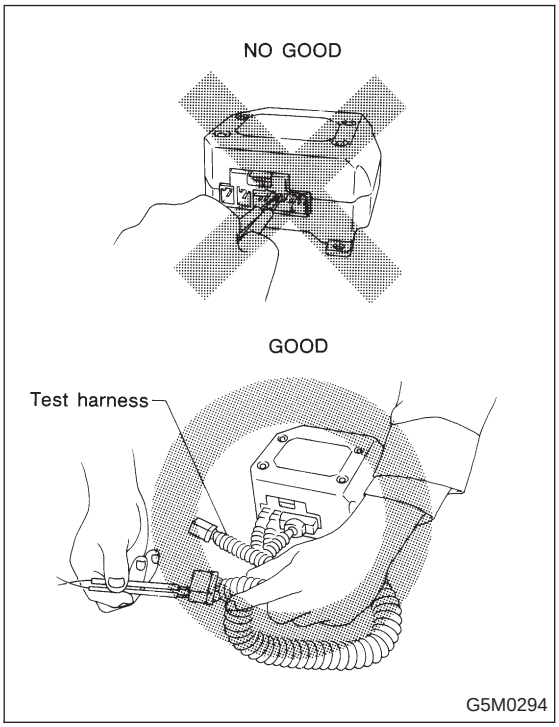

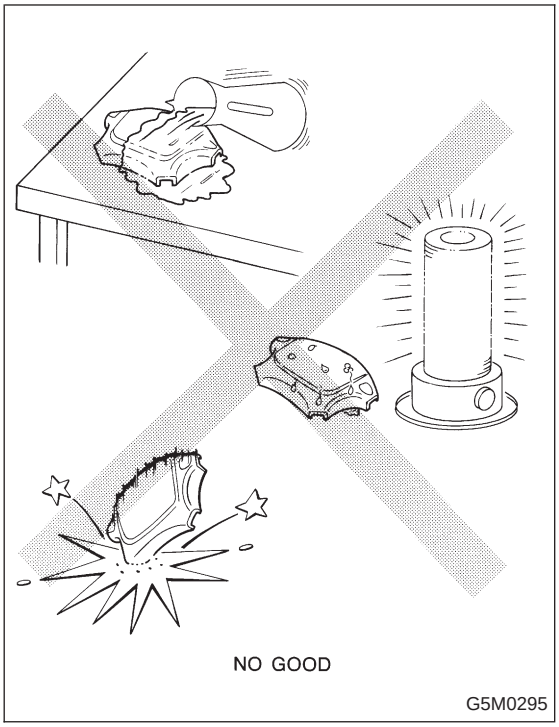

4) Do not drop the airbag modulator parts, subject it to high temperatures over 90°C (194°F), or apply oil, grease, or water to it; otherwise, the internal parts may be damaged and its reliability greatly lowered.

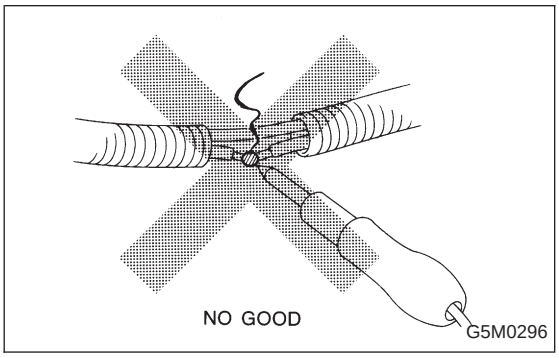

5) If any damage or open is found on the SRS airbag system wire harness, do not attempt to repair using soldering, etc. Be sure to replace the faulty harness with a new genuine part.

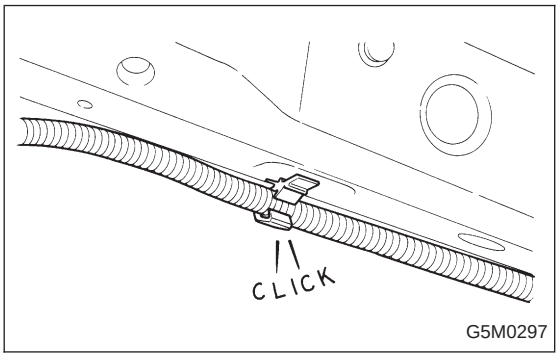

6) Install the wire harness securely with the specified clips so as to avoid interference or jamming with other parts.

7) Before connecting the airbag system to ground, make sure that the grounding terminal is free from paint and contamination.

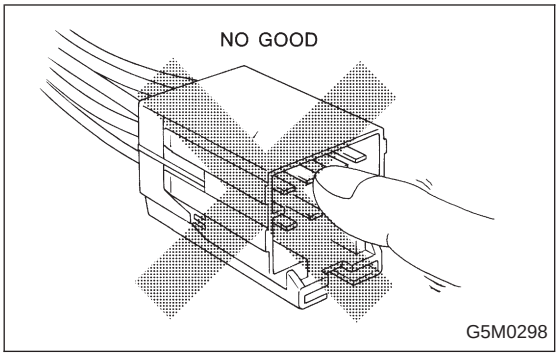

8) Do not allow water or oil to come in contact with the connector terminals. Do not touch the connector terminals.

9) When connecting or disconnecting airbag connector, make sure ignition switch is OFF.

2. Inspection and Replacement Standards

1. VEHICLES WHICH BECOME INVOLVED IN A COLLISION

If the vehicle equipped with an SRS airbag system is damaged in a collision, the airbag system parts must be checked and replaced in accordance with the following standards:
After faulty parts are replaced, the warning light operation must be checked.
- **When the ignition switch is turned ON, it lights up for about 7 seconds and then it goes out for at least 30 seconds.**
- **The trouble code stored in memory must be erased after the check.**

2. AIRBAG MODULE (DRIVER AND PASSENGER)

Inspection standard:

- The vehicle damaged in a collision (regardless of whether or not airbag is deployed).
- The designated trouble code is output during self-diagnosis. (Refer to “Diagnostics” Section.)

Replacement standard:

- Airbag is deployed.
- The pad surface is scratched or cracked.
- Harness and/or connector is deformed or cracked, their circuits are broken, lead wire is exposed, etc.
- Mounting bracket is cracked or deformed.
- The module surface is fouled with foreign matter. (grease, oil, water, cleaning solvent, etc.)
- Airbag module dropped to the floor/ground.
- Airbag module determined as faulty during self-diagnosis.