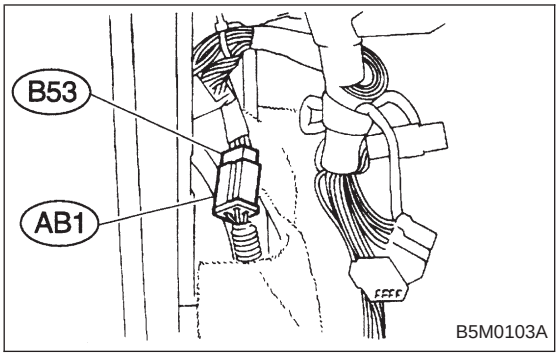

5) Disconnect body harness connector (B53) from connector (AB1).

NOTE:
The following procedures for removal are for “LHD model”. The procedures for “RHD model” are symmetrically opposite.

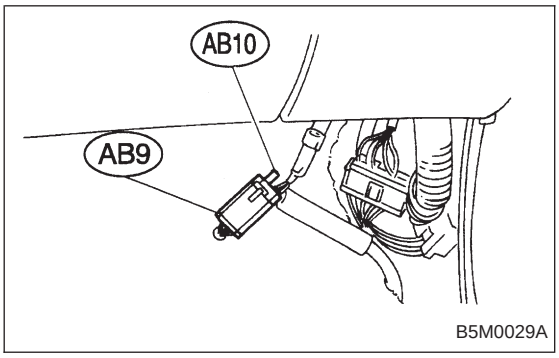

6) Remove front side sill cover and then disconnect airbag connector (AB9) and (AB10). <Ref. to 5-5 [M2-6].>

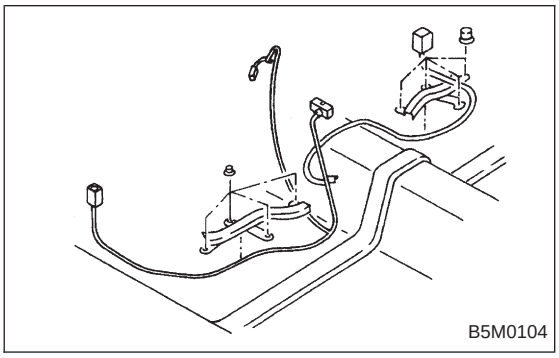

7) Roll up floor mat and side sill lower cover of both side and then remove main harness.

B: INSTALLATION

Installation is in reverse order of removal procedures.

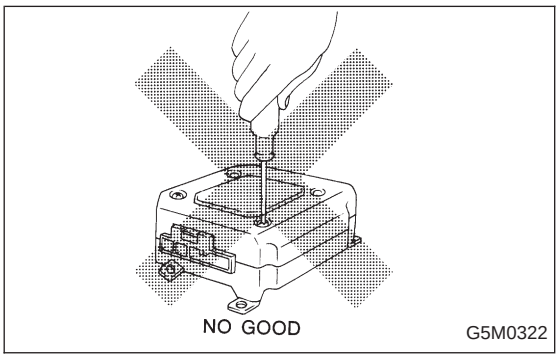

6. Airbag Control Module

CAUTION:

- **Do not disassemble the airbag control module.**

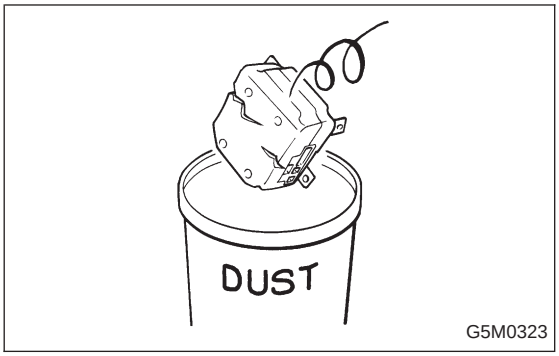

G5M0323

● **If the airbag control module is deformed, or if water damage is suspected, replace the airbag control module with a new genuine part.**

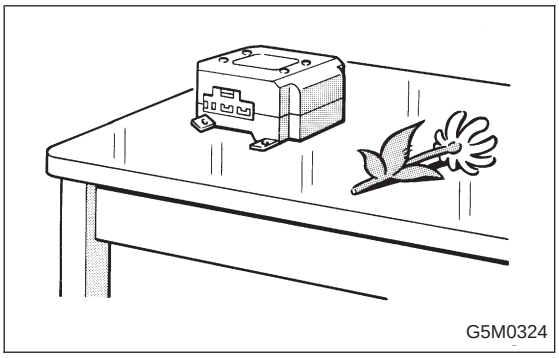
G5M0324

● **After removal, keep the airbag control module on a dry, clean surface away from heat and light sources, and moisture and dust.**

A: REMOVAL

1) Turn ignition switch off.
2) Disconnect ground cable from battery and wait for at least 20 seconds before starting work.

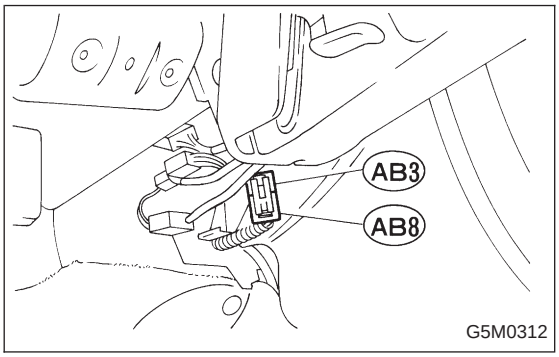

G5M0312

3) Remove lower cover. <Ref. to 5-4 [W1A0].>
Disconnect airbag connector (AB3) and (AB8) below steering column.

CAUTION:
Do not reconnect airbag connector at steering column until airbag control module is securely re-installed.

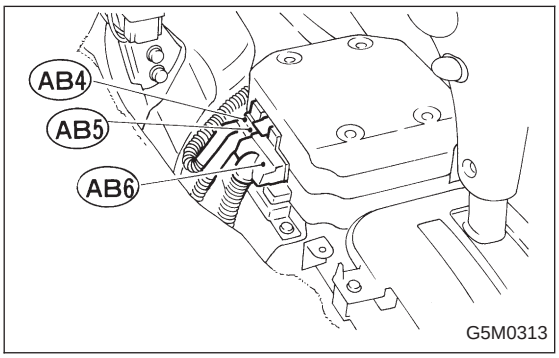

G5M0313

4) Remove console box. <Ref. to 5-4 [W1A0].>
5) Disconnect 12-pin yellow, 2-pin blue and 2-pin orange connectors from airbag control module. <Ref. to 5-5 [M2-6].>

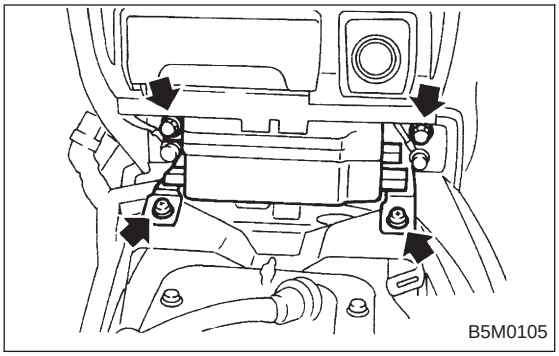

6) Using TORX® BIT T40 (Tamper resistant type), remove two TORX® bolts.
Discard the old TORX® bolts.

CAUTION:
Use new TORX® bolts during re-assembly.

B: INSTALLATION

Installation is in reverse order of removal procedures.

CAUTION:
Be sure to fully secure all airbag system connectors during re-assembly and confirm that all green double lock mechanisms are engaged.

7. Combination Switch

A: REMOVAL

1) Turn ignition switch off.
2) Disconnect ground cable from battery and wait for at least 20 seconds before starting work.

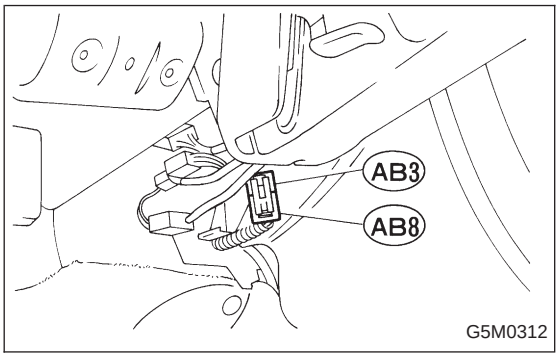

3) Remove lower cover. <Ref. to 5-4 [W1A0].> Disconnect airbag connector (AB3) and (AB8) below steering column.

CAUTION:
Do not reconnect airbag connector at steering column until combination switch is securely re-installed.

4) Disconnect combination switch connectors from body harness connector.

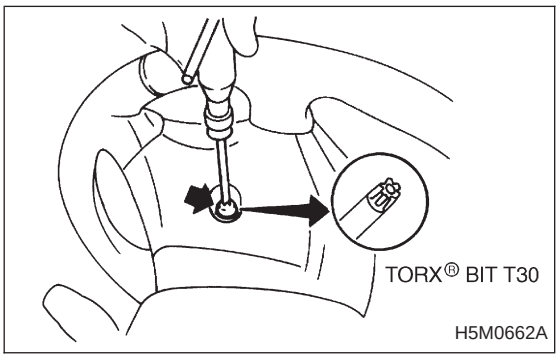

5) Set front wheels in straight ahead position. Using TORX® BIT T30, remove two TORX® bolts.