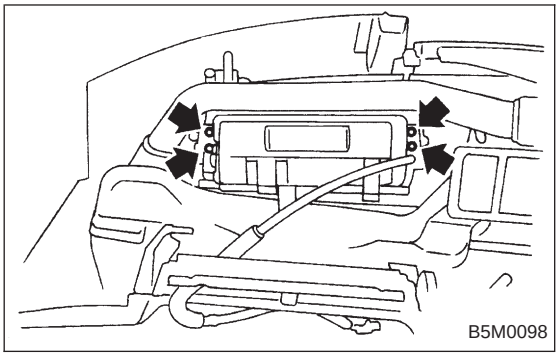

2) Remove four bolts and then carefully remove airbag module.

3) Refer to **"CAUTION"** for handling of a removed airbag module.

B: INSTALLATION

Installation is in reverse order of removal procedures.
Observe the following: Make sure that ignition switch is off.

CAUTION:
Do not allow harness and connectors to interfere or get caught with other parts.

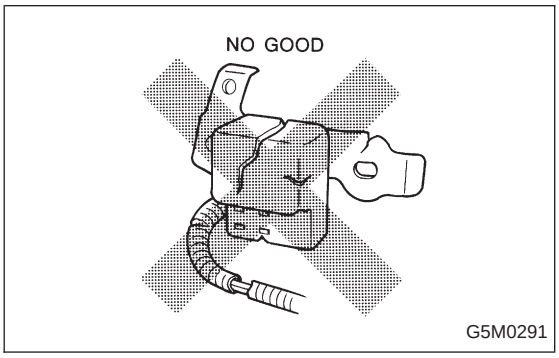

4. Front Sensor

CAUTION:

- **If the front end of the vehicle body is damaged by a collision, be sure to check the left and right front sensors, even if the airbag was not inflated. If any damage to the sensor or any deformation of the sensor mount is found, replace with a new genuine part.**

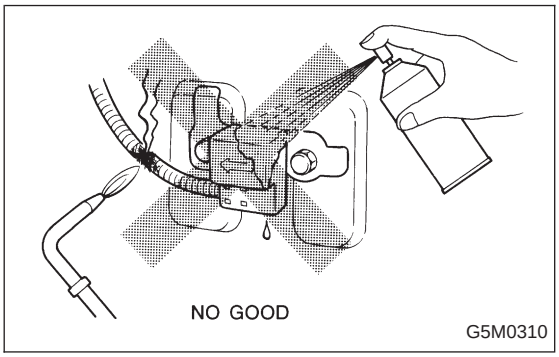

- **When painting or performing sheet metal work on the front part of vehicle body, including the front wheel apron, front fender and front side frame, take utmost care not to apply dryer heat, painting mist, or the flame of the welding burner directly to the front sensors and wire harness of the airbag system.**

A: REMOVAL

1) Turn ignition switch off.
2) Disconnect ground cable from battery and wait for at least 20 seconds before starting work.

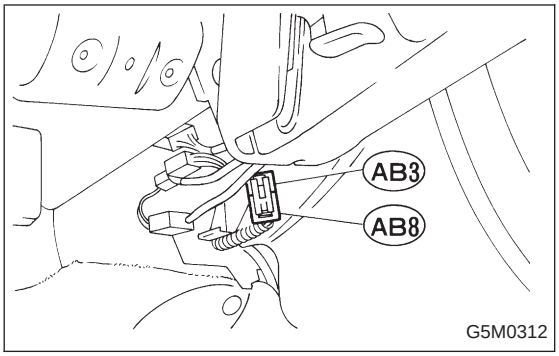

3) Remove lower cover. <Ref. to 5-4 [W1A0].>
Disconnect airbag connector (AB3) and (AB8) below steering column.

CAUTION:
Do not reconnect airbag connector at steering column until front sensors are securely re-installed.

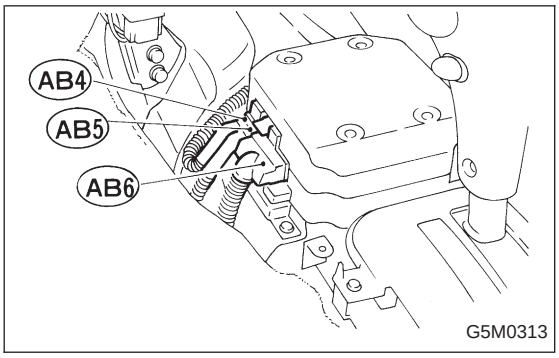

4) Remove console box. <Ref. to 5-4 [W1A0].> Disconnect 2-pin blue connector (AB4) (right side front sensor) and 2-pin orange connector (AB5) (left side front sensor) from airbag control module. <Ref. to 5-5 [M2-6].>

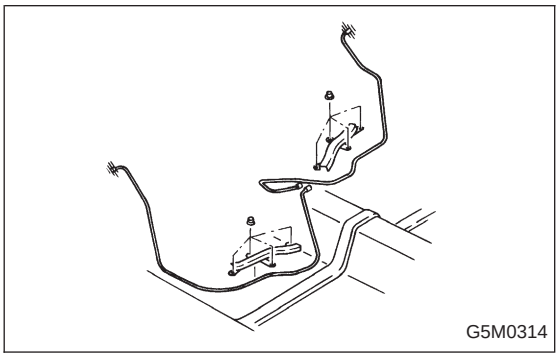

5) Roll up floor mat and side sill cover. <Refer to 5-3 [W5A10].> Remove front sensor harness from clip and protector.
6) Remove front wheels.
7) Remove front mud guard. <Refer to 5-1 [W9A0].>

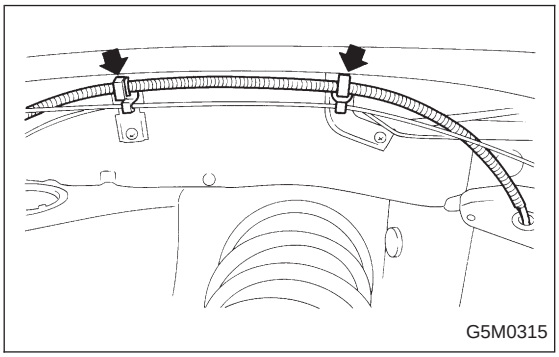

8) Remove wiring harness clips.

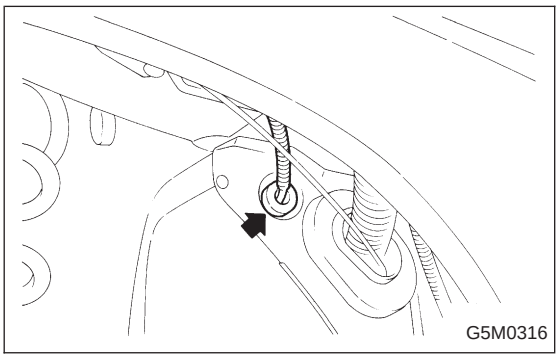

9) Remove grommet.

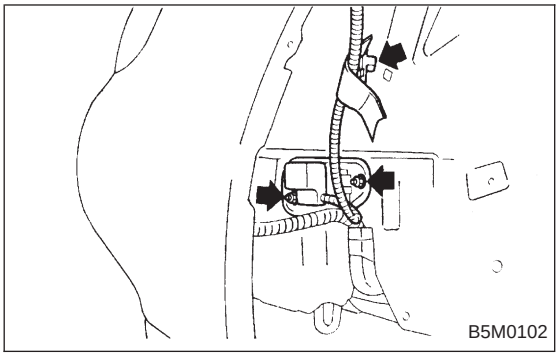

10) Remove front sensor.

B: INSTALLATION

Installation is in reverse order of removal procedures.

5. Main Harness

A: REMOVAL

1) Turn ignition switch off.
2) Disconnect ground cable from battery and wait for at least 20 seconds before starting work.

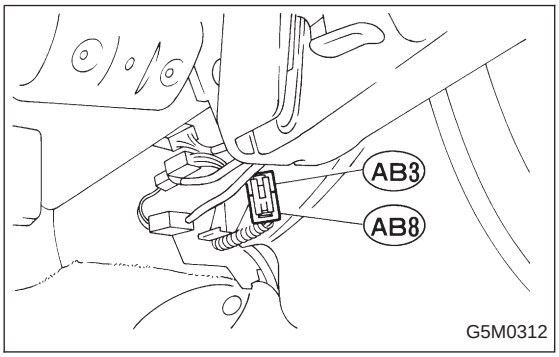

3) Remove lower cover. <Ref. to 5-4 [W1A0].>
Disconnect airbag connector (AB3) and (AB8) below steering column.

CAUTION:
Do not reconnect airbag connector at steering column until main harness are securely re-installed.

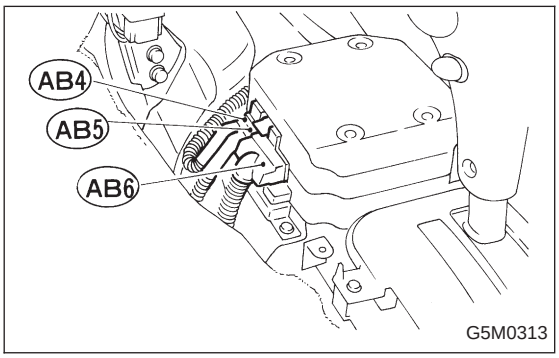

4) Remove console box. <Ref. to 5-4 [W1A0].> Disconnect 12-pin yellow connector (AB6) from airbag control module. <Ref. to 5-5 [M2-6].>