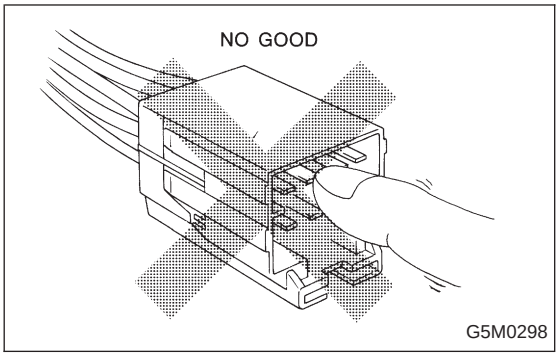

8) Do not allow water or oil to come in contact with the connector terminals. Do not touch the connector terminals.

9) When connecting or disconnecting airbag connector, make sure ignition switch is OFF.

2. Inspection and Replacement Standards

1. VEHICLES WHICH BECOME INVOLVED IN A COLLISION

If the vehicle equipped with an SRS airbag system is damaged in a collision, the airbag system parts must be checked and replaced in accordance with the following standards:
After faulty parts are replaced, the warning light operation must be checked.
- **When the ignition switch is turned ON, it lights up for 8 seconds and then it goes out for at least 30 seconds.**
- **The trouble code stored in memory must be erased after the check.**

2. AIRBAG MODULE (DRIVER AND PASSENGER)

Inspection standard:

- The vehicle damaged in a collision (regardless of whether or not airbag is deployed).
- The designated trouble code is output during self-diagnosis. (Refer to “Diagnostics” Section.)

Replacement standard:

- Airbag is deployed.
- The pad surface is scratched or cracked.
- Harness and/or connector is deformed or cracked, their circuits are broken, lead wire is exposed, etc.
- Mounting bracket is cracked or deformed.
- The module surface is fouled with foreign matter. (grease, oil, water, cleaning solvent, etc.)
- Airbag module dropped to the floor/ground.
- Airbag module determined as faulty during self-diagnosis.

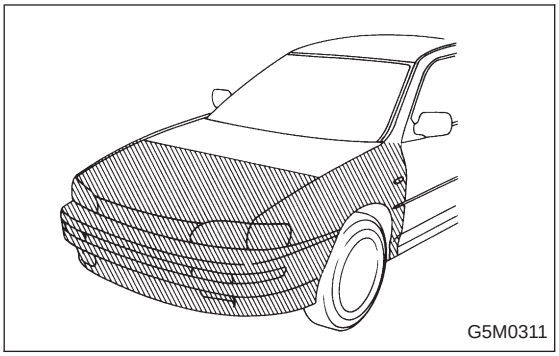

3. FRONT SENSOR

Inspection standard:

- Check the front section (Refer to shaded area of vehicle in figure) for damage, regardless of whether or not airbag is deployed.
- Check whether or not the designated trouble code is output during self-diagnosis. (Refer to “Diagnostics” Section.)

Replacement standard:

- Bracket is deformed.
- Housing is cracked or deformed.
- The label (that identifies the manufacturing number) is peeled or deteriorated.
- Harness circuit is broken, lead wire is exposed, corrugated tube is cracked, etc.
- Front sensor determined as faulty as a result of Diagnostics.
- Airbag is deployed.
- Front sensor dropped to the floor/ground.

4. MAIN HARNESS

Inspection standard:

- A vehicle damaged in a collision (regardless of whether or not airbag is deployed).
- The designated trouble code is output during self-diagnosis. (Refer to “Diagnostics” Section.)

Replacement standard:

- Harness circuit is broken, lead wire is exposed, corrugated tube is cracked, etc.
- Connector is scratched or cracked.
- The designated trouble code is output during self-diagnosis.

5. AIRBAG CONTROL MODULE

Inspection standard:

- A vehicle damaged in a collision (regardless of whether or not airbag is deployed).
- The designated trouble code is output during self-diagnosis. (Refer to “Diagnostics” Section.)

Replacement standard:

- Control module is cracked or deformed.
- Mounting bracket is cracked or deformed.
- Connector is scratched or cracked.
- Control module dropped to the floor/ground.
- Control module determined as faulty during diagnostics.
- Airbag is deployed.

6. COMBINATION SWITCH

Inspection standard:

- A vehicle damaged in a collision (regardless of whether or not airbag is deployed).
- The designated trouble code is output during self-diagnosis. (Refer to “Diagnostics” Section.)

Replacement standard:

- Combination switch or steering roll connector is deformed or cracked.

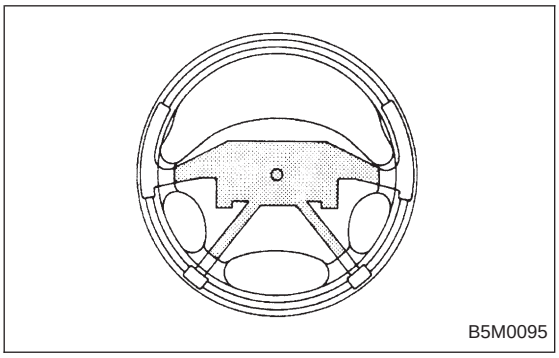

7. STEERING WHEEL

Inspection standard:

- A vehicle damaged in a collision (regardless of whether or not airbag is deployed).

Replacement standard:

- Check steering wheel insert for cracks or deformities.
- Check to ensure that new airbag module is properly installed in steering wheel.
- After installing airbag module, check to ensure that it is free of interference with steering wheel and that clearance between the two is equal at all points.

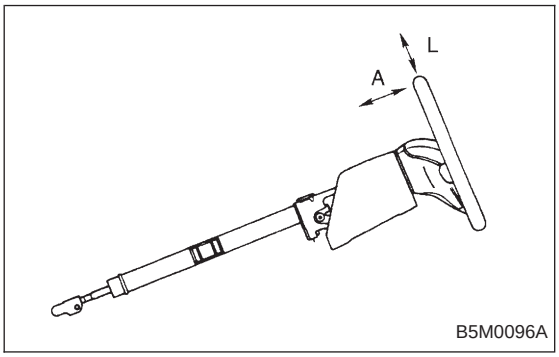

8. STEERING COLUMN ASSEMBLY

Inspection standard:

- A vehicle damaged in a collision (regardless of whether or not airbag is deployed).

Replacement standard:

- Check steering wheel free play in axial and radial directions.

Specifications:

Axial free play A
Less than ±6 mm (0.24 in)
Radial free play L
Less than ±7 mm (0.28 in)

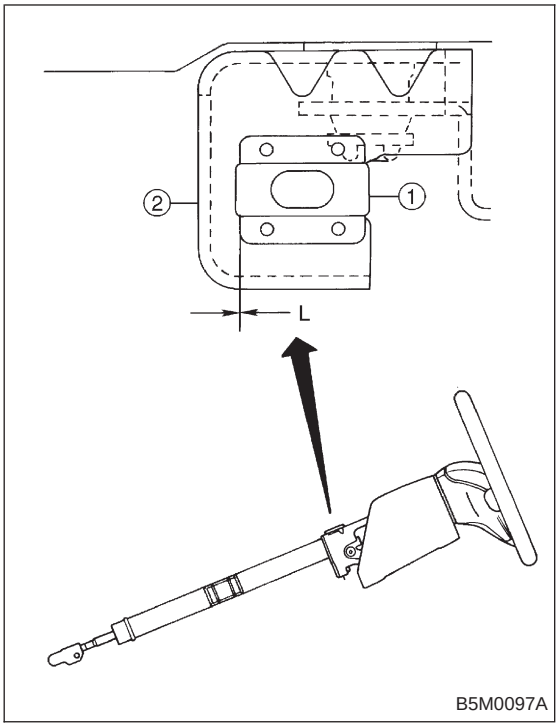

● Check to ensure that clearance between capsule ① (at steering column) and cutout portion of column bracket ② on steering column upper side is within specifications.

Clearance between capsule and cutout portion of column bracket: L
Less than 0.5 mm (0.020 in)