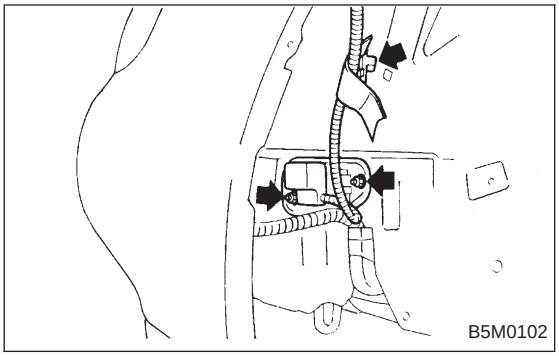

10) Remove front sensor.

B: INSTALLATION

Installation is in reverse order of removal procedures.

5. Main Harness

A: REMOVAL

1) Turn ignition switch off.
2) Disconnect ground cable from battery and wait for at least 20 seconds before starting work.

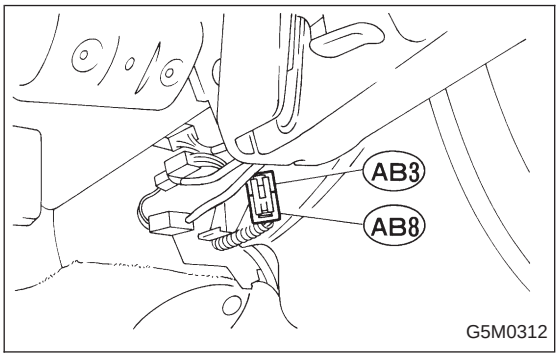

3) Remove lower cover. <Ref. to 5-4 [W1A0].>
Disconnect airbag connector (AB3) and (AB8) below steering column.

CAUTION:
Do not reconnect airbag connector at steering column until main harness are securely re-installed.

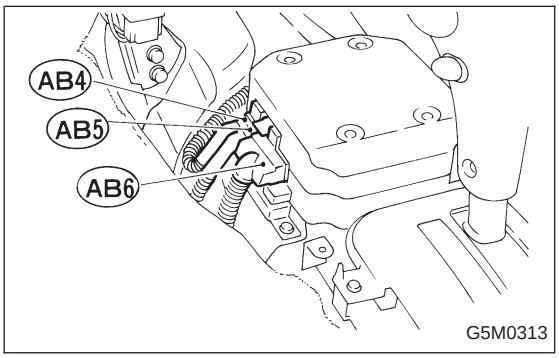

4) Remove console box. <Ref. to 5-4 [W1A0].> Disconnect 12-pin yellow connector (AB6) from airbag control module. <Ref. to 5-5 [M2-6].>

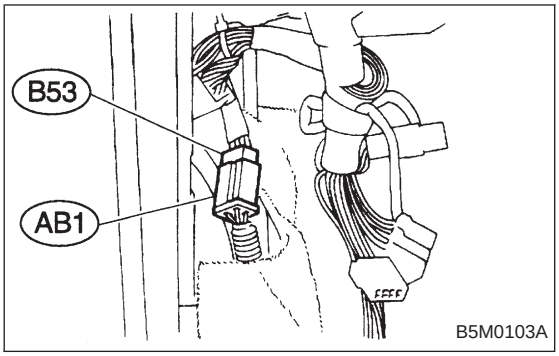

5) Disconnect body harness connector (B53) from connector (AB1).

NOTE:
The following procedures for removal are for “LHD model”. The procedures for “RHD model” are symmetrically opposite.

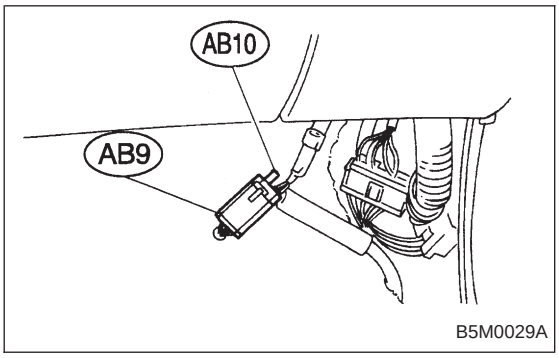

6) Remove front side sill cover and then disconnect airbag connector (AB9) and (AB10). <Ref. to 5-5 [M2-6].>

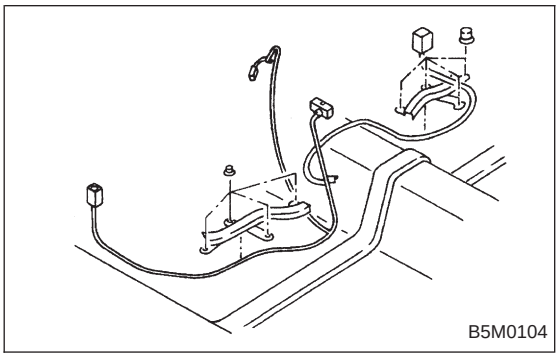

7) Roll up floor mat and side sill lower cover of both side and then remove main harness.

B: INSTALLATION

Installation is in reverse order of removal procedures.

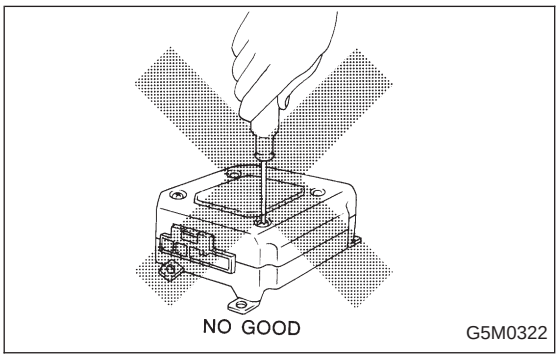

6. Airbag Control Module

CAUTION:

- **Do not disassemble the airbag control module.**