3. Front Seat Belt

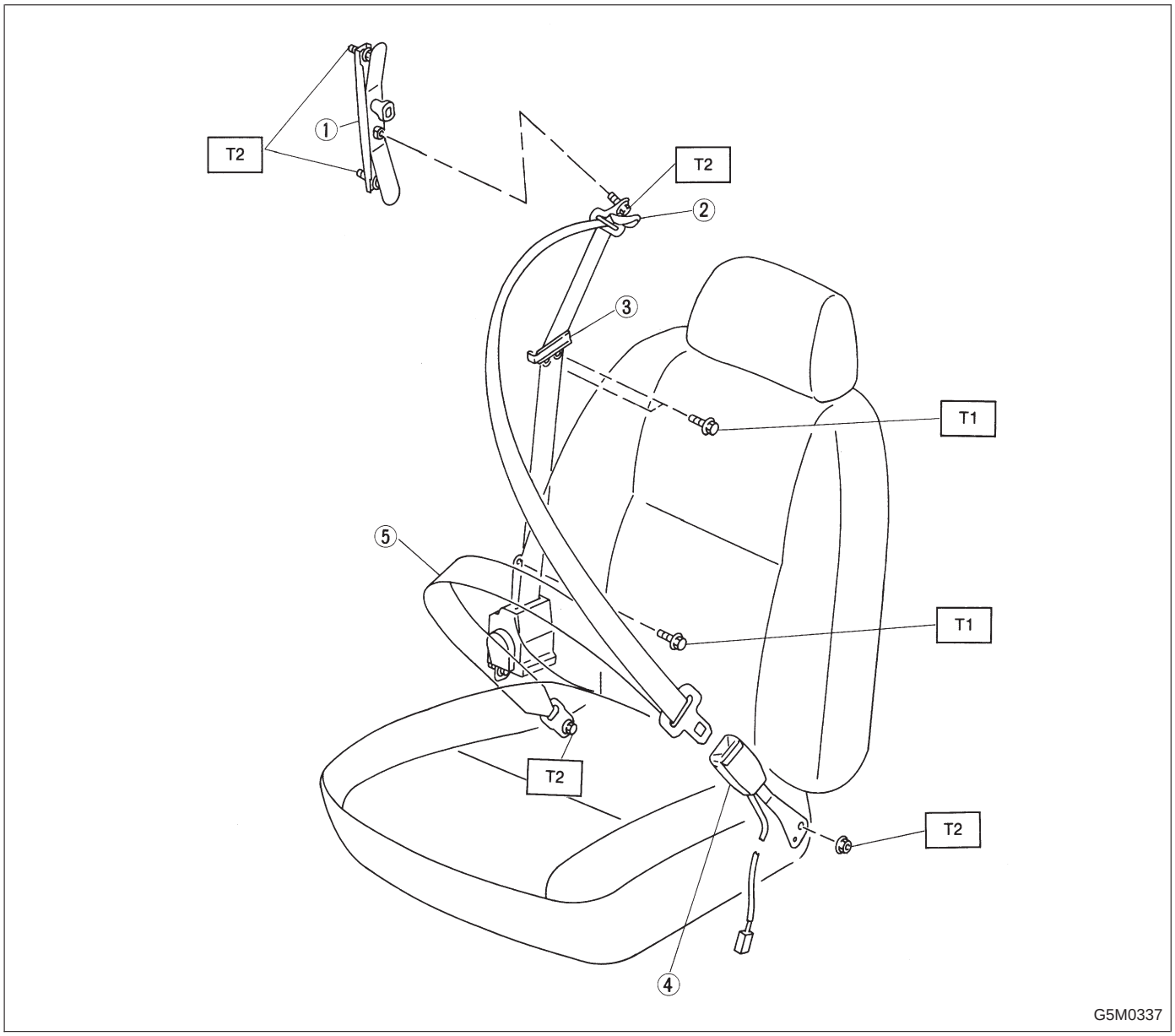

① Adjuster anchor ASSY
② Through anchor cover
③ Webbing guide
④ Inner belt ASSY
⑤ Outer belt ASSY

Tightening torque: N·m (kg-m, ft-lb)
T1: 13±3 (1.3±0.3, 9.4±2.2)
T2: 35±13 (3.6±1.3, 26±9)