1. Front Seat

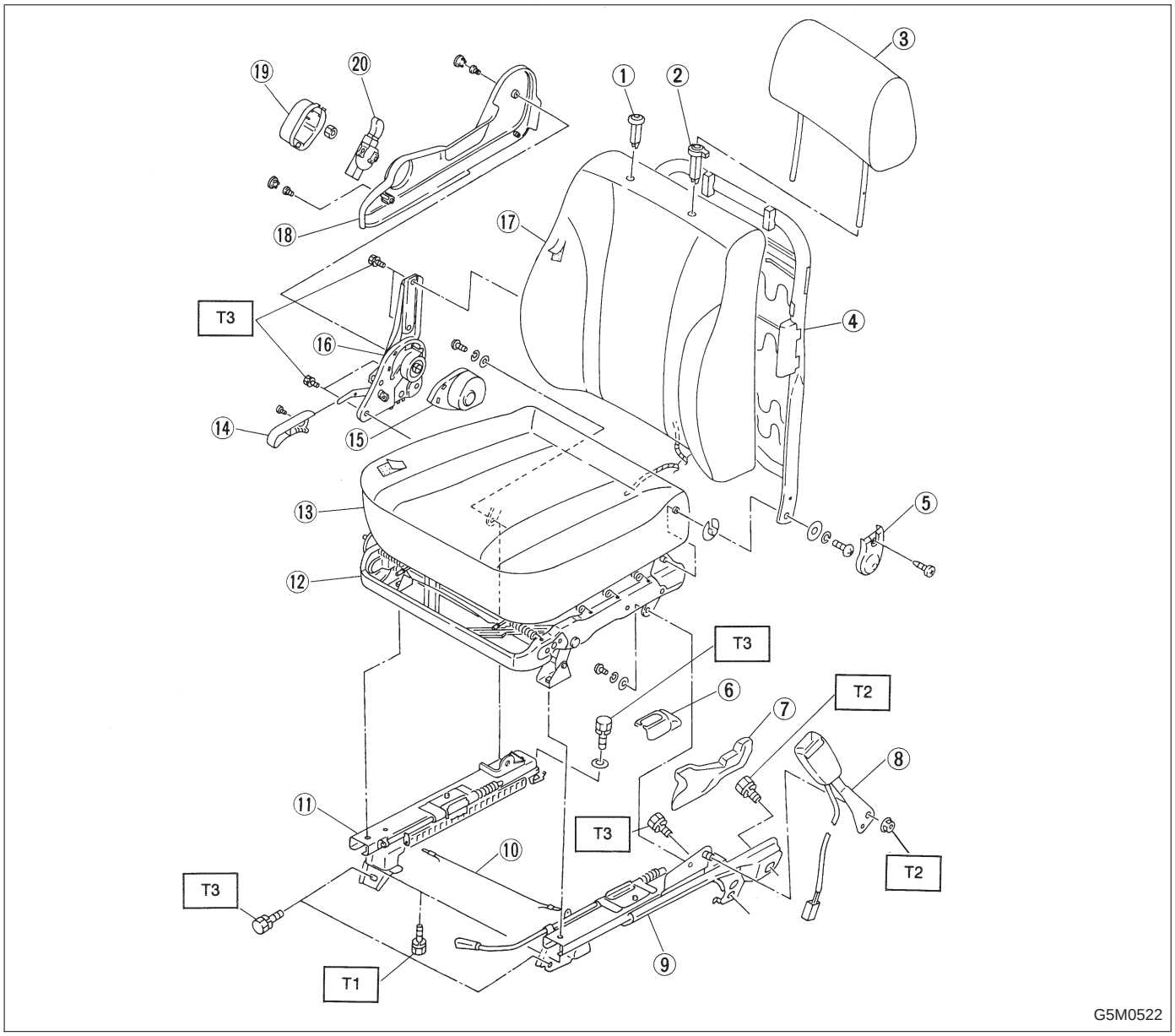

① Headrest free bushing
② Headrest lock bushing
③ Headrest ASSY
④ Front backrest frame ASSY
⑤ Protector
⑥ Cover (Bolt) (outer)
⑦ Cover (Bolt) (inner)
⑧ Inner belt ASSY
⑨ Inner slide rail ASSY
⑩ Connect wire
⑪ Outer slide rail ASSY
⑫ Front cushion frame ASSY
⑬ Cushion ASSY
⑭ Reclining lever
⑮ Hinge spring cover
⑯ Reclining hinge ASSY
⑰ Backrest ASSY
⑱ Hinge cover
⑲ Tilt lever cover
⑳ Tilt lever ASSY

Tightening torque: N·m (kg-m, ft-lb)
T1: 23±5 (2.3±0.5, 16.6±3.6)
T2: 29±7 (3.0±0.7, 21.7±5.1)
T3: 52±10 (5.3±1.0, 38±7)