5. Inner Trim

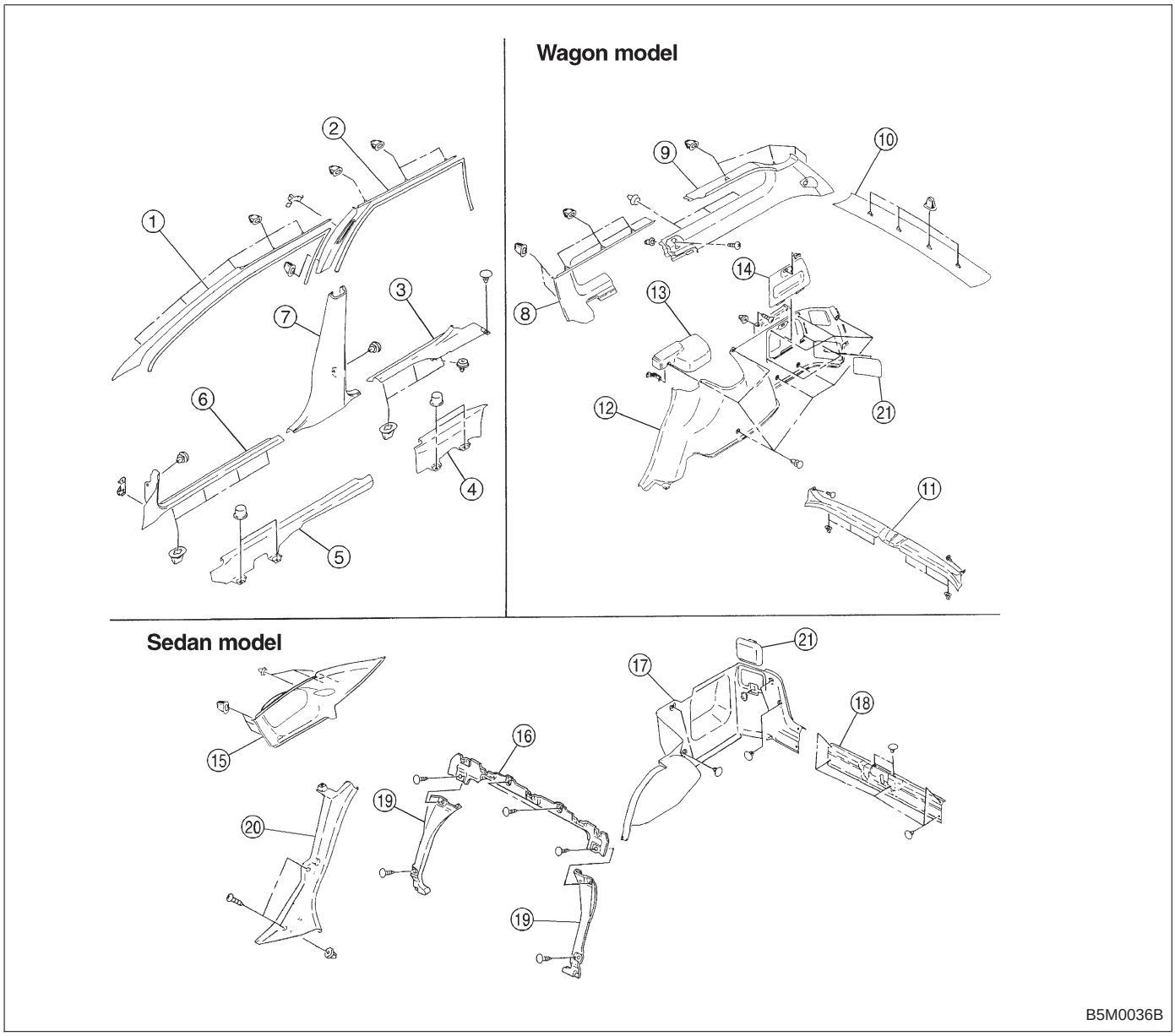

① Front pillar upper trim
② Center pillar upper trim
③ Side sill rear upper cover
④ Side sill rear lower cover
⑤ Side sill front lower cover
⑥ Front pillar lower trim
⑦ Center pillar lower trim
⑧ Rear quarter upper front trim
⑨ Rear quarter upper rear trim
⑩ Rear rail trim
⑪ Edge rear trim
⑫ Rear quarter pillar lower trim
⑬ Cap strut
⑭ Lid pocket
⑮ Rear pillar upper
⑯ Rear upper bulk
⑰ Trunk side trim
⑱ Trunk rear trim
⑲ Rear side bulk trim
⑳ Rear pillar lower trim
㉑ Lamp cover