4. Rear Seat Belt

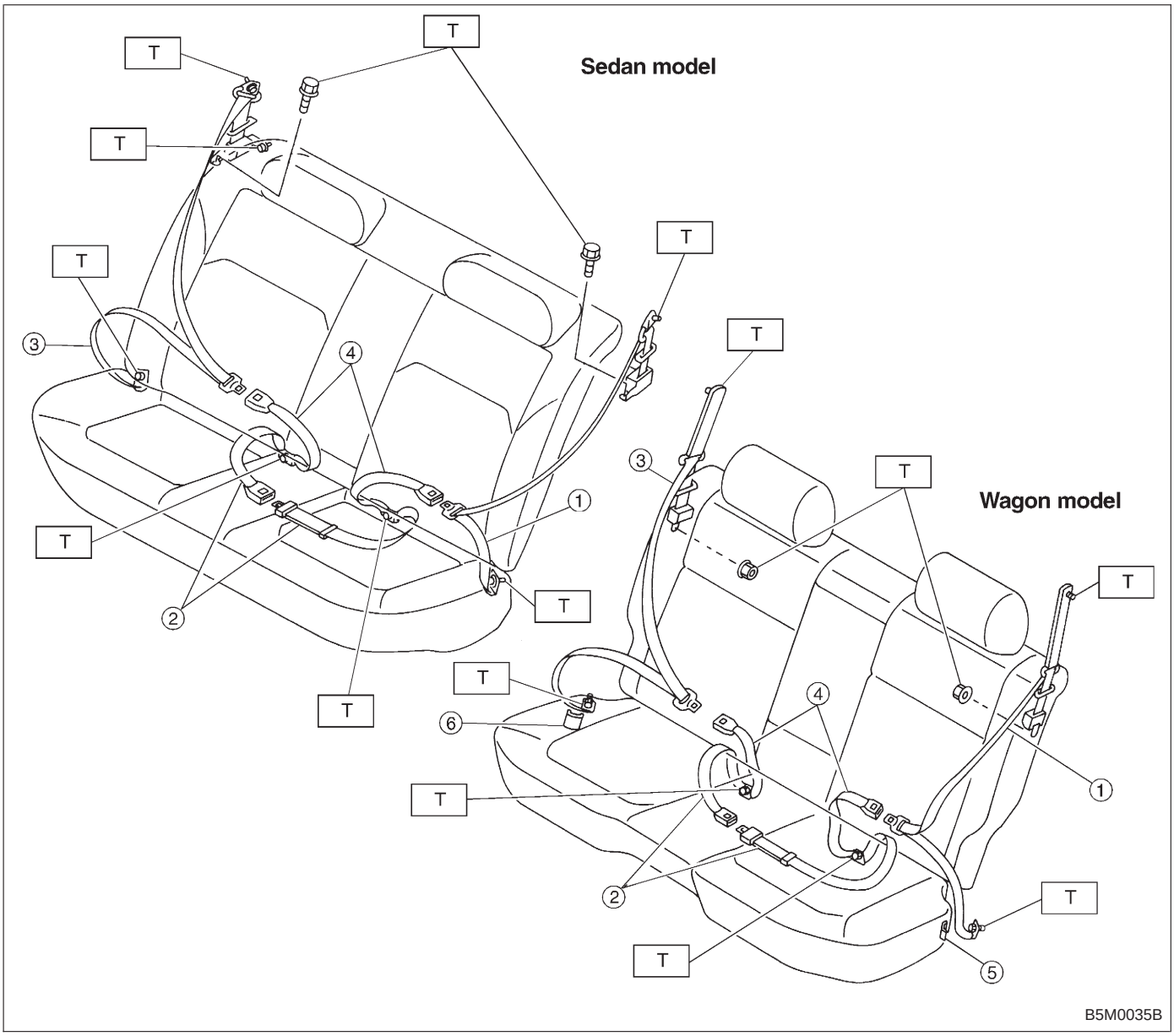

① Outer seat belt (LH)
② Center seat belt
③ Outer seat belt (RH)
④ Inner seat belt
⑤ Lap anchor cover (LH)
⑥ Lap anchor cover (RH)

Tightening torque: N·m (kg-m, ft-lb)
T: 35±13 (3.6±1.3, 26±9)