2. Rear Seat

1. SEDAN MODEL

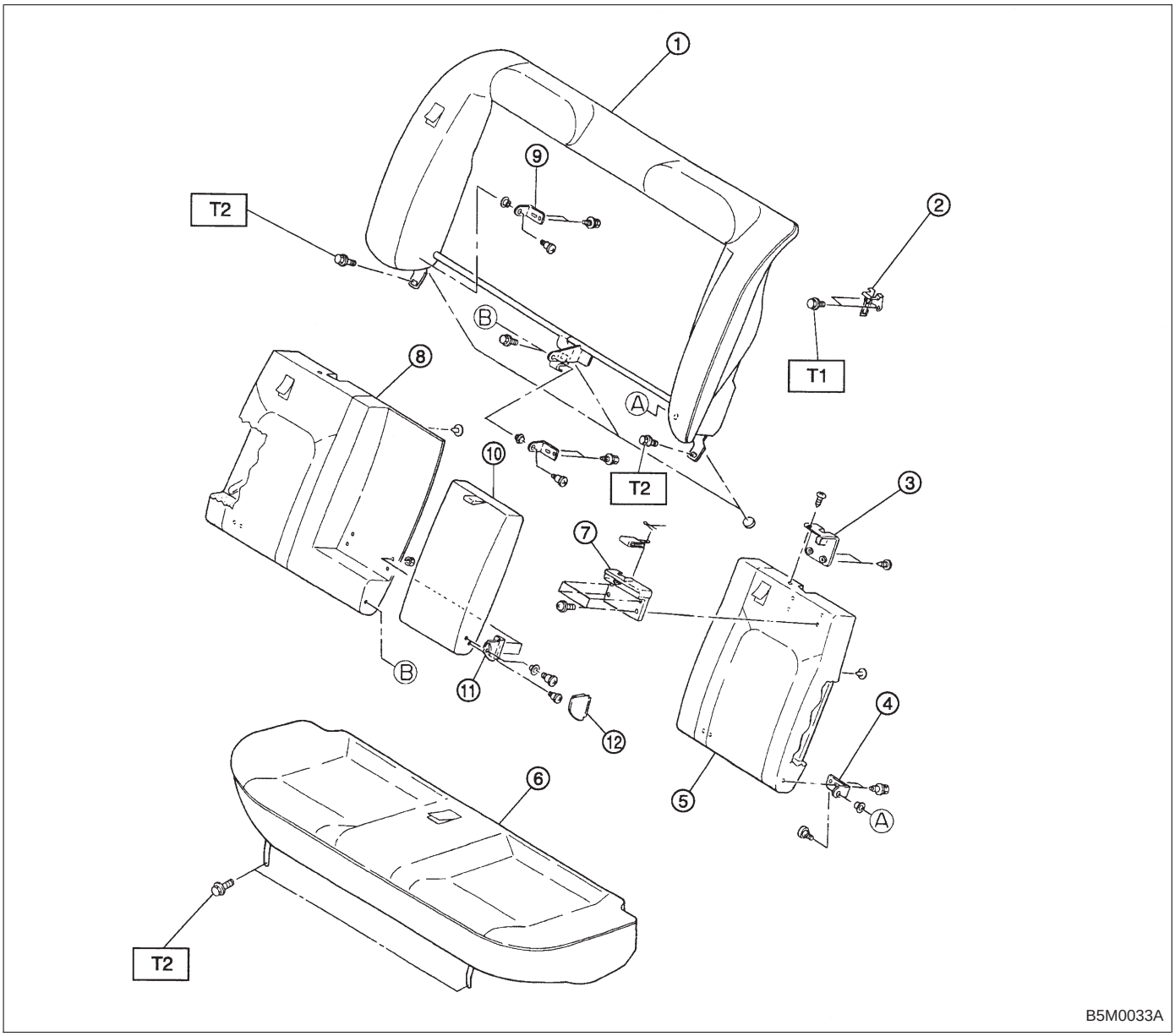

① Backrest
② Striker
③ Lock cover
④ Bracket (LH)
⑤ Backrest (LH)
⑥ Cushion
⑦ Lock ASSY
⑧ Backrest (RH)
⑨ Bracket (RH)
⑩ Arm rest
⑪ Hinge
⑫ Cover

Tightening torque: N·m (kg-m, ft-lb)
T1: 10±3 (1.0±0.3, 7.2±2.2)
T2: 25±7 (2.5±0.7, 18.1±5.1)

COMPONENT PARTS

2. WAGON MODEL

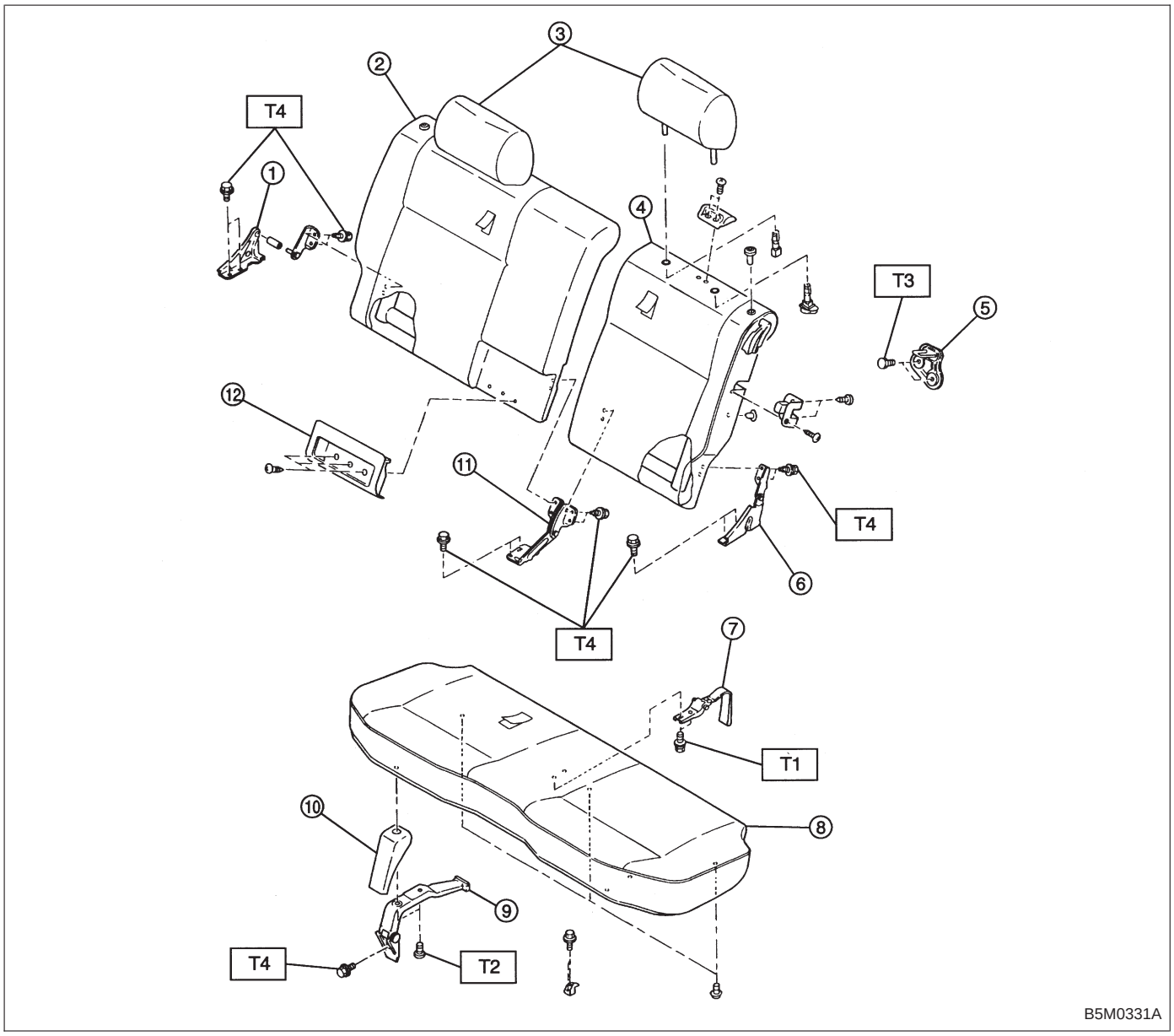

① Hinge bracket (RH)
② Backrest (RH)
③ Pillow
④ Backrest (LH)
⑤ Striker
⑥ Hinge bracket (LH)
⑦ Lock hinge
⑧ Rear cushion
⑨ Hinge
⑩ Hinge cover
⑪ Backrest center hinge
⑫ Pocket

Tightening torque: N·m (kg-m, ft-lb)
T1: 2±1 (0.2±0.1, 1.4±0.7)
T2: 5.9±1.5 (0.6±0.15, 4.3±1.1)
T3: 10±3 (1.0±0.3, 7.2±2.2)
T4: 25±7 (2.5±0.7, 18.1±5.1)