2. WAGON MODEL

Installation is in the reverse order of removal.

CAUTION:

- **Do not allow center seat belt to get under cushion when folding cushion.**
- **Ensure that side seat belt tongue is free from cushion and trim panel.**
- **Lift front of cushion to ensure that cushion is properly locked.**

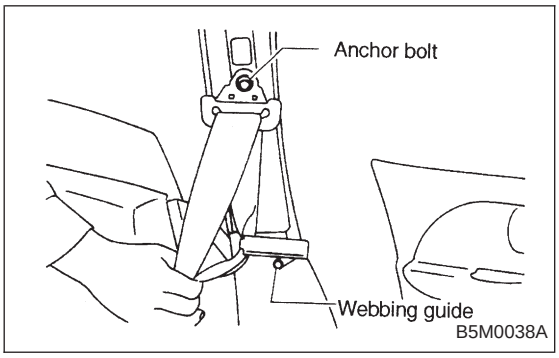

3. Front Seat Belt

A: REMOVAL AND INSTALLATION

1. OUTER BELT

1) Remove through anchor cover cap.
2) Remove shoulder anchor bolt.
3) Remove side sill rear upper cover and front pillar lower trim.
4) Remove center pillar lower trim.

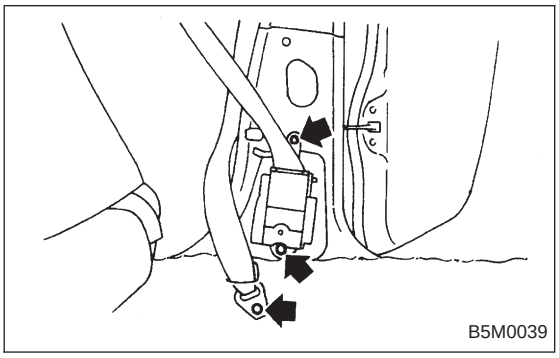

5) Remove webbing guide.
6) Roll up floor mat at the bottom of center pillar.
7) Remove lap anchor bolt.
8) Remove outer belt assembly.

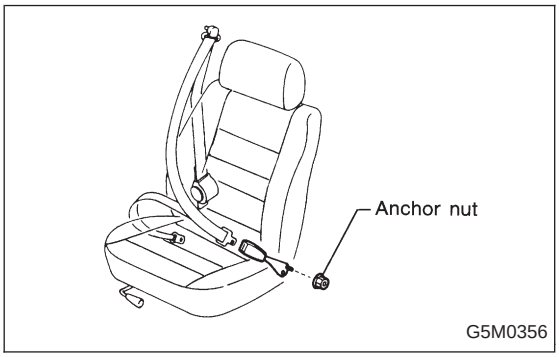

2. INNER BELT

Remove anchor nut.

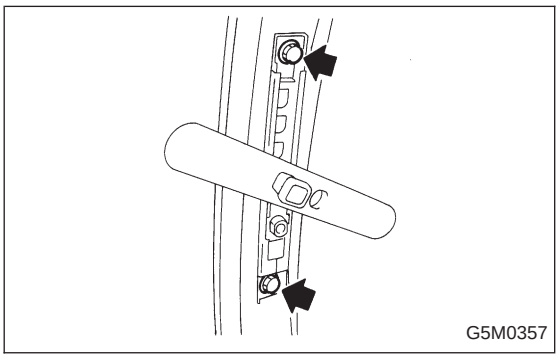

3. ADJUSTABLE SHOULDER ANCHOR

1) Remove shoulder anchor bolt.
2) Remove lower center pillar trim.
3) Remove front and center pillar upper trim.
4) Remove adjustable shoulder anchor assembly.
5) Installation is in the reverse order of removal.

CAUTION:

- **The left and right ELR's are not mutually interchangeable because different sensors are used.**
- **Be careful not to twist belts during installation.**