1. Front Seat

A: REMOVAL

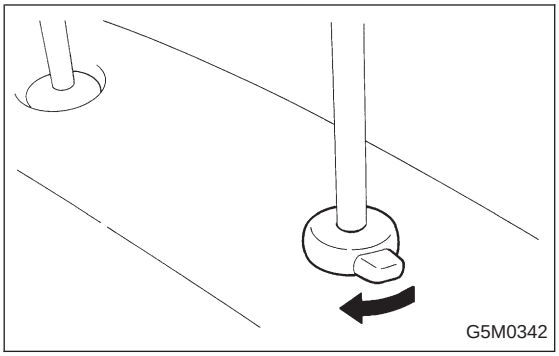

1) While operating knob (located on top of backrest), lift headrest out with hand placed between backrest and headrest.
2) Pull reclining lever back to fold backrest all the way forward. While pulling slide adjuster lever, move seat all the way forward.

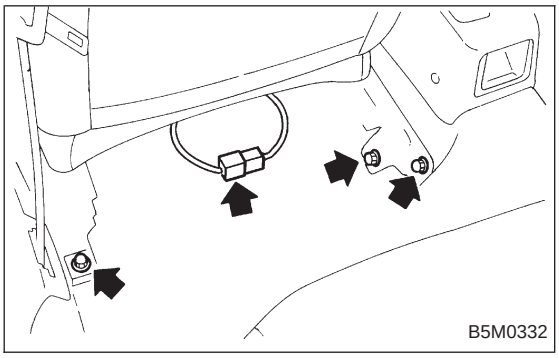

3) Disconnect connector under driver's seat.
4) Remove bolt cover at rear end of slide rail.
5) Remove bolts securing seat rear.

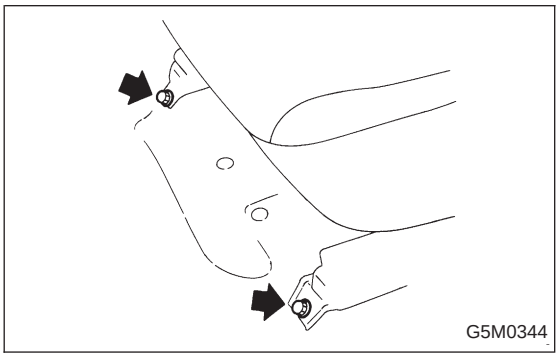

6) While pulling slide adjuster lever, slide seat all the way back.
7) Remove bolts securing front of seat.

8) Remove front seat from vehicle, then install headrest.

CAUTION:
Be careful not to scratch seat when removing it from vehicle.

B: INSTALLATION

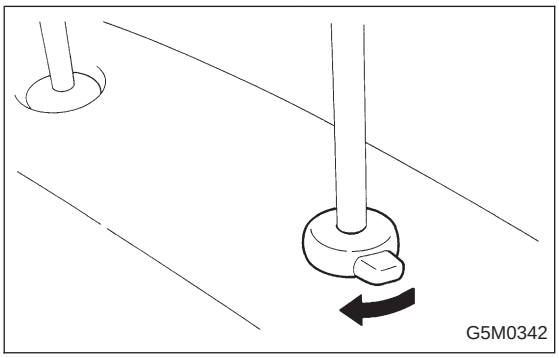

1) While operating knob (located on top of backrest), lift headrest out with hand placed between backrest and headrest.
2) Pull reclining lever back to fold backrest all the way forward. Pull slide adjuster lever and move lower slide rail all the way backward.

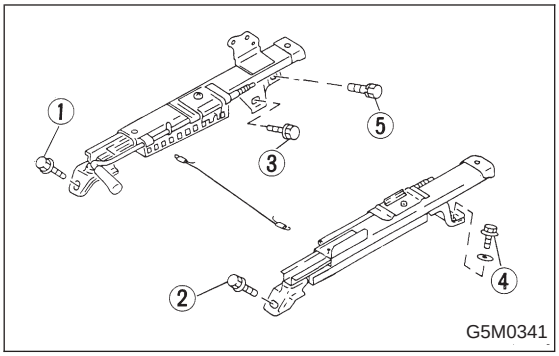

3) Position seat in compartment and align the holes on the seat with the holes on the vehicle body side.
4) Secure the front of seat using inward and outward bolts ① and ② in that order.
5) While pulling slide adjuster lever, move seat all the way forward.
6) Secure the rear of seat using inward and outward bolts ③ and ④ in that order.
7) Install bolt ⑤.
8) Connect connector under driver's seat.

CAUTION:
Check that all lock plate pawls are completely and equally inserted into the holes in the slide rail brackets.

9) After installation, ensure that all mechanisms operate properly and lock.
10) If any mechanism does not function properly, loosen bolts ③, ④ and ⑤, slide seat as required, insert all lock plate pawls into holes in slide rail brackets, and tighten bolts ③, ④ and ⑤ in that order.
11) Install bolt cover on rear end of slide rail.
12) Install headrest on backrest.
NOTE:
Tighten bolts in the designated order.

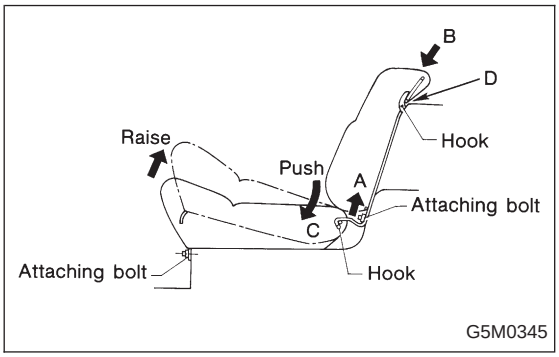

2. Rear Seat

A: REMOVAL

1. SEDAN MODEL

1) Remove bolts securing hinges (located at front of cushion) to body.
2) Slightly raise front of cushion while pushing down on cushion in the direction of "C". With cushion held in that position, move it forward until it is unhooked.

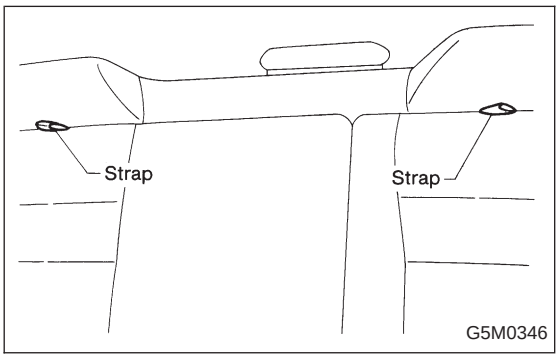

3) Remove bolts securing lower portion of backrest to body.
4) Pull strap (located in center of fold-down backrest) to release lock, and fold backrest onto cushion. (Fold-down type)
5) Lift rear seat backrest in direction "A" until it is released from upper hooks.