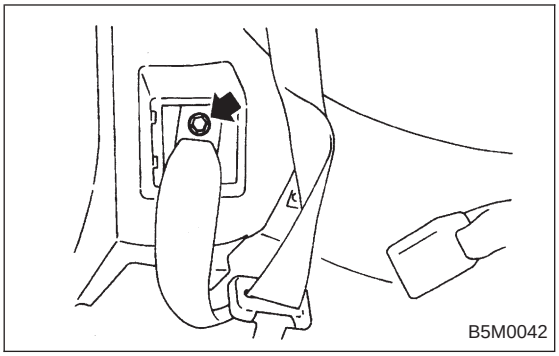

6) Remove lap anchor cover and then remove lower anchor bolt.
7) Remove outer belt assembly.

8) Installation is in the reverse order of removal. Ensure that seat belt is properly reeled on and off after installation of ELR.

CAUTION:
- **Be extremely careful not to confuse center seat anchor plate with outer seat anchor plate during installation.**
- **Ensure that seat belts are free from twisting after installation.**
- **Ensure that tongues, buckles and belts are properly placed on seat.**

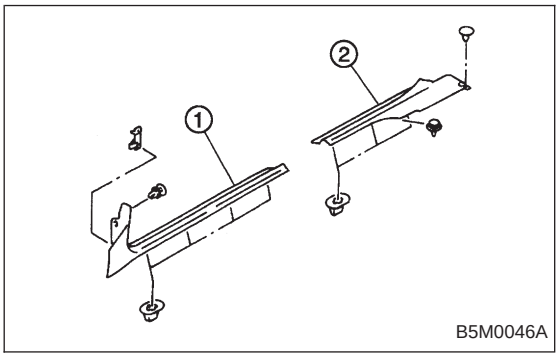

5. Inner Trim Panel

A: REMOVAL AND INSTALLATION

1. SIDE SILL COVER

1) Remove front pillar lower trim ①.
2) Remove side sill rear upper cover trim ②.

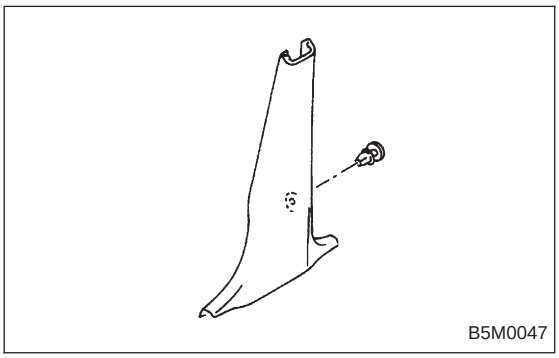

2. CENTER PILLAR LOWER

Remove center pillar lower trim.

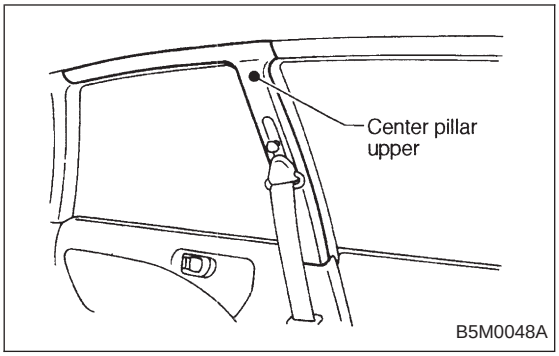

3. CENTER PILLAR UPPER

<Ref. to 5-3 [C500].>

1) Remove front pillar upper trim.
2) Remove upper anchor of front seat belt.
3) Remove center pillar upper trim panel.
4) Installation is in the reverse order of removal.

CAUTION:

- **The left and right ELR's are not mutually interchangeable because different sensors are used.**
- **Be careful not to twist belts during installation.**

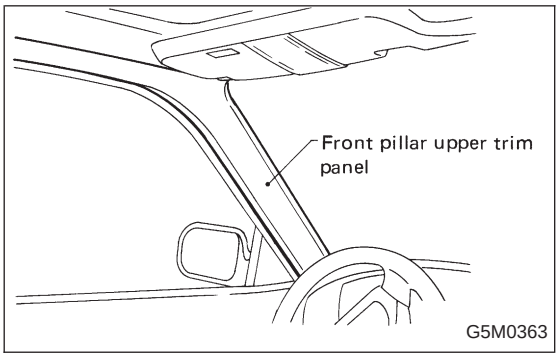

4. FRONT PILLAR UPPER

<Ref. to 5-3 [C500].>

Remove front pillar upper trim panel.

CAUTION:

Be sure to securely hook pawls of front pillar upper trim panel on body flange.

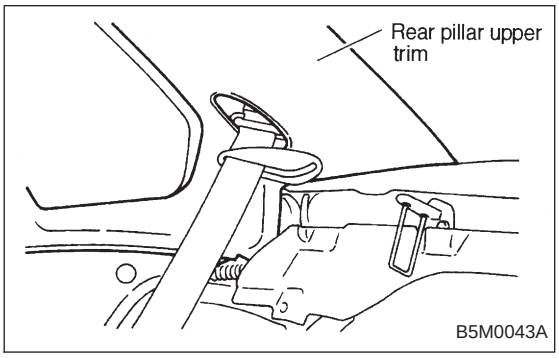

5. REAR PILLAR UPPER

1) Remove rear seat cushion and backrest.
2) Remove rear seat belt. (Lower anchor bolt)
3) Remove rear pillar upper trim panel. <Ref. to 5-3 [C500].>
4) Installation is in the reverse order of removal.

CAUTION:

Be sure to securely hook pawls of rear pillar upper trim panel on body flange.

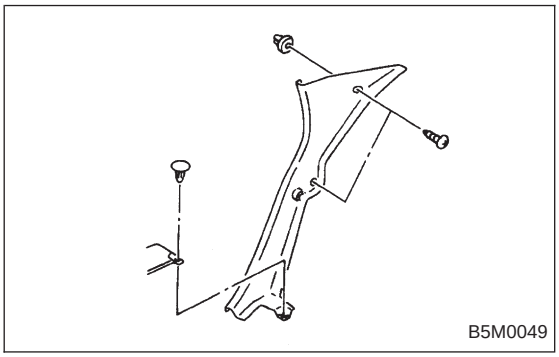

6. REAR PILLAR LOWER

<Ref. to 5-3 [C500].>

1) Remove side sill rear upper cover trim.
2) Remove rear pillar lower trim.

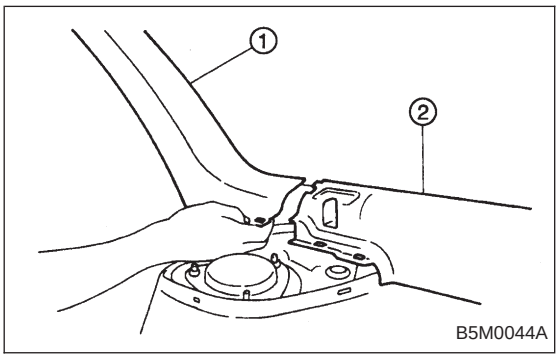

7. REAR QUARTER PILLAR UPPER

<Ref. to 5-3 [C500].>

1) Remove rear seat belt. (Upper anchor bolt)
2) Remove cap strut.
3) Remove rear quarter upper front trim ①.
4) Remove rear quarter upper rear trim ②.
5) Installation is in the reverse order of removal.

CAUTION:

Be sure to securely hook pawls of rear quarter pillar trim panel on body flange.

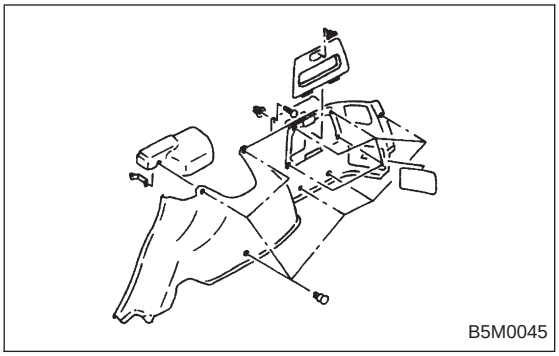

8. REAR QUARTER PILLAR LOWER

<Ref. to 5-3 [C500].>

1) Set rear seat cushion up.
2) Remove side sill rear upper cover.
3) Remove rear seat belt. (Upper anchor and lower anchor bolts)
4) Remove side skirt trim.
5) Remove cap strut.
6) Remove rear quarter upper rear trim.
7) Remove rear quarter pillar lower trim.
8) Installation is in the reverse order of removal.

CAUTION:
Be careful not to ride trim panel over harness, insulators, etc.

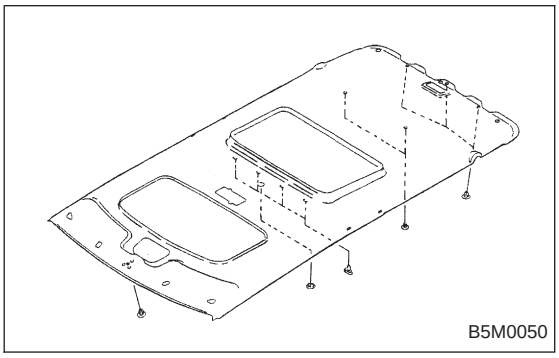

9. ROOF TRIM

<Ref. to 5-3 [C500].>

1) Remove room mirror, room light, sun visor and assist grip.
2) Remove front pillar upper, center pillar upper, rear quarter upper and rear rail trim.
3) Using ST, remove clips and then detach roof trim.

ST 925580000 PULLER

4) Installation is in the reverse order of removal.

CAUTION:
When removing clip, use great care to prevent damaging the roof trim.

10. FLOOR MAT AIRBAG
Supplemental Restraint System "Airbag"

Airbag system wiring harness is routed near floor mat.

CAUTION:
- **All Airbag system wiring harness and connectors are colored yellow. Do not use electrical test equipment on these circuit.**
- **Be careful not to damage Airbag system wiring harness when servicing floor mat.**

The following procedure is applicable to all models.

<Ref. to 5-3 [C500].>

1) Remove front seats.
2) Remove rear seat cushion.
3) Remove console box.
4) Remove front pillar lower trim panel.
5) Remove center pillar lower trim panel.
6) Remove side sill cover.
7) Remove fuel opener cover.

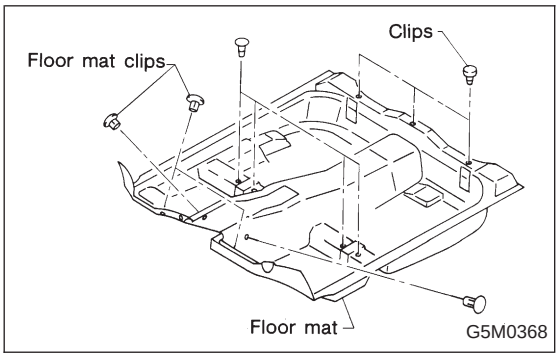

8) Remove clip under front seat.
9) Remove clip in toe board area.

NOTE:
When pulling out edge, do not pull mat alone; pull mat together with edge.
Pry off two steel clips on side sill front cover and one on side sill rear cover using screwdriver.

10) Remove mat hook.
11) Remove mat from toe board area.
12) Remove mat from heater module.

13) Roll mat, and take it out of opened rear door.
14) Installation is in the reverse order of removal.

NOTE:
- Secure mat firmly with hook and velcro tape.
- Insert mat edge firmly into the groove of side sill cover.