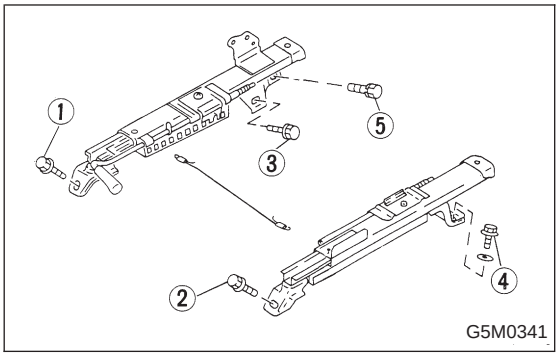

3) Position seat in compartment and align the holes on the seat with the holes on the vehicle body side.
4) Secure the front of seat using inward and outward bolts ① and ② in that order.
5) While pulling slide adjuster lever, move seat all the way forward.
6) Secure the rear of seat using inward and outward bolts ③ and ④ in that order.
7) Install bolt ⑤.
8) Connect connector under driver's seat.

CAUTION:
Check that all lock plate pawls are completely and equally inserted into the holes in the slide rail brackets.

9) After installation, ensure that all mechanisms operate properly and lock.
10) If any mechanism does not function properly, loosen bolts ③, ④ and ⑤, slide seat as required, insert all lock plate pawls into holes in slide rail brackets, and tighten bolts ③, ④ and ⑤ in that order.
11) Install bolt cover on rear end of slide rail.
12) Install headrest on backrest.
NOTE:
Tighten bolts in the designated order.

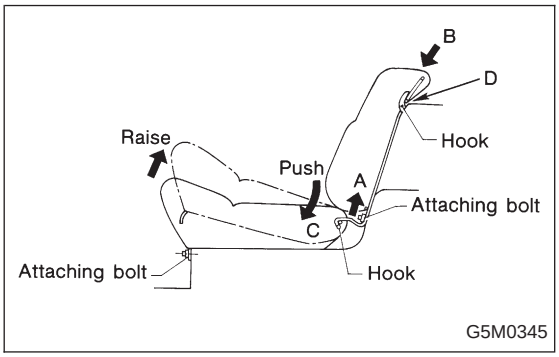

2. Rear Seat

A: REMOVAL

1. SEDAN MODEL

1) Remove bolts securing hinges (located at front of cushion) to body.
2) Slightly raise front of cushion while pushing down on cushion in the direction of "C". With cushion held in that position, move it forward until it is unhooked.

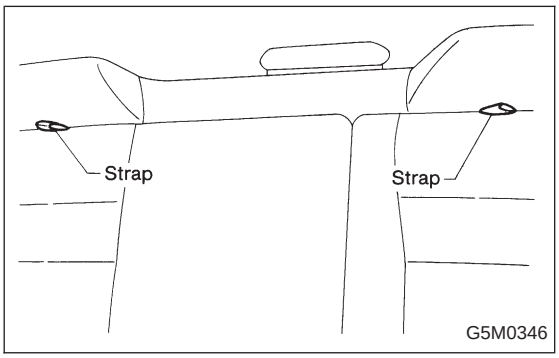

3) Remove bolts securing lower portion of backrest to body.
4) Pull strap (located in center of fold-down backrest) to release lock, and fold backrest onto cushion. (Fold-down type)
5) Lift rear seat backrest in direction "A" until it is released from upper hooks.

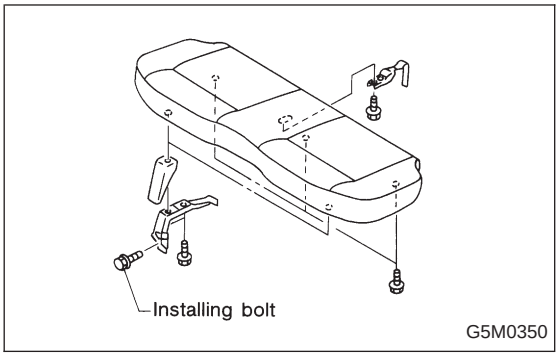

2. WAGON MODEL

1) Remove bolts securing hinges (located at front of seat) to body.
2) Pull strap (located in middle rear portion of cushion) to release lock. Lift cushion out and away from body.
3) Pull knobs (located at each side of backrest's upper portion) up to release lock, and fold backrest all the way forward.

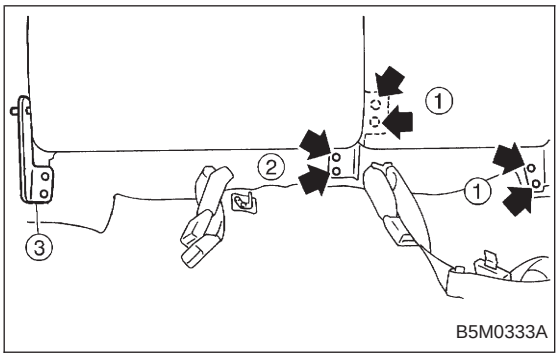

4) Remove the bolt ① and then remove backrest. (LH side)
5) Remove the bolt ② and then remove backrest (RH side) from hinge bracket ③.

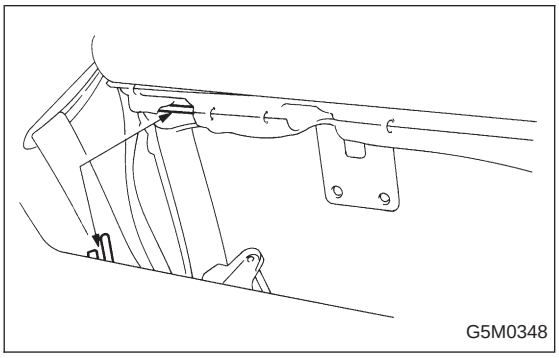

B: INSTALLATION

1. SEDAN MODEL

1) Before installing backrest, ensure that trim panel, insulator and seat belt are properly installed.
2) Transfer outer seat belt webbing to front of backrest and fold backrest forward. Attach seat wire to upper hooks (2 places), and move pillow in the direction of "B" until backrest is aligned with lower mounting holes in body.
3) Engage backrest's folding mechanism with striker.
4) Secure lower center and both sides of backrest to body with bolts.
5) Slightly raise front section of cushion while pushing down on cushion in the direction of "C". With cushion held in that position, attach rear section of cushion to hooks at lower frame location.
6) Secure front of cushion to body with bolts.

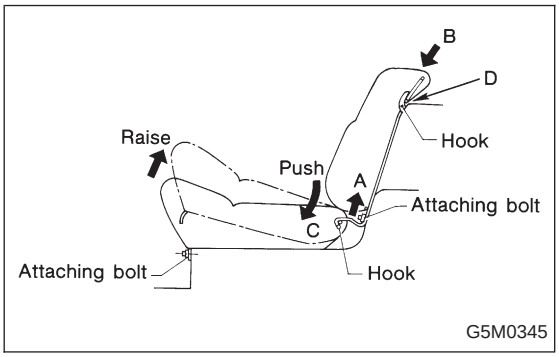

CAUTION:

- **Before installing seat, ensure that seat belt is placed on cushion.**
- **Confirm that winding of three-point type seat belt can operate regularly.**

2. WAGON MODEL

Installation is in the reverse order of removal.

CAUTION:

- **Do not allow center seat belt to get under cushion when folding cushion.**
- **Ensure that side seat belt tongue is free from cushion and trim panel.**
- **Lift front of cushion to ensure that cushion is properly locked.**

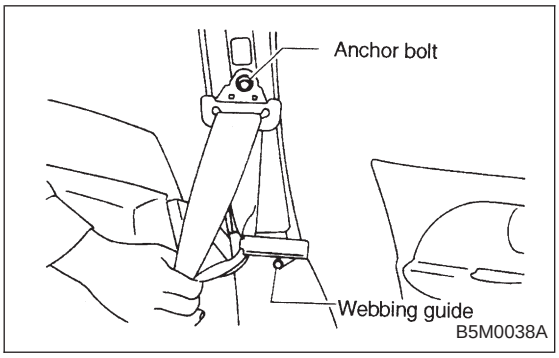

3. Front Seat Belt

A: REMOVAL AND INSTALLATION

1. OUTER BELT

1) Remove through anchor cover cap.
2) Remove shoulder anchor bolt.
3) Remove side sill rear upper cover and front pillar lower trim.
4) Remove center pillar lower trim.

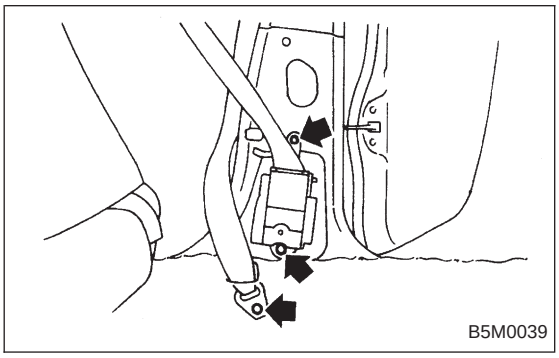

5) Remove webbing guide.
6) Roll up floor mat at the bottom of center pillar.
7) Remove lap anchor bolt.
8) Remove outer belt assembly.

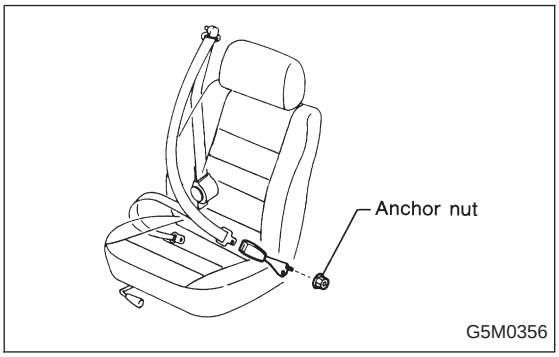

2. INNER BELT

Remove anchor nut.

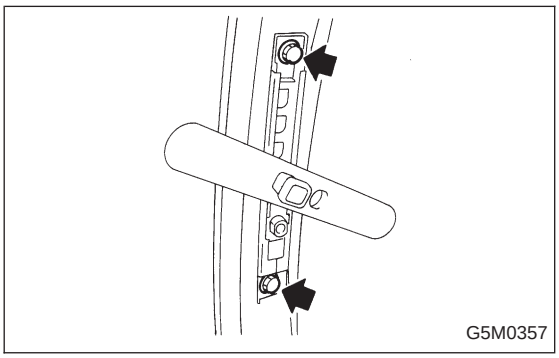

3. ADJUSTABLE SHOULDER ANCHOR

1) Remove shoulder anchor bolt.
2) Remove lower center pillar trim.
3) Remove front and center pillar upper trim.
4) Remove adjustable shoulder anchor assembly.
5) Installation is in the reverse order of removal.

CAUTION:

- **The left and right ELR's are not mutually interchangeable because different sensors are used.**
- **Be careful not to twist belts during installation.**